SPARE PARTS DIAGRAM FOR

Gas Fryer
35C+ & 45C+

First Choice Group
Blakeney Way, Kingswood Lakeside
Cannock, Staffs, WS11 8LD
TEL: 01543 577778 FAX: 01543504141
Email: enquires@firstchoice-cs.co.uk
Web: www.firstchoice-cs.co.uk

35C+ & 45C+

GAS FRYER
EXPLODED PARTS MANUAL

PITCO FRIALATOR INC.
www.pitco.com
P.O. Box 501, Jct. I-89 & I-93 Concord, NH 03302-0501 • 509 Route 3A, Bow, NH 03304 USA Telephone (800) 258-3708 • (603) 225-6684 • Fax: (603) 225-8497

PN L22-229 Rev. 1 (02/02)

© 2002 - Pitco Frialator Incorporated

35C+ AND 45C+ FRYER
FULL ASSEMBLY

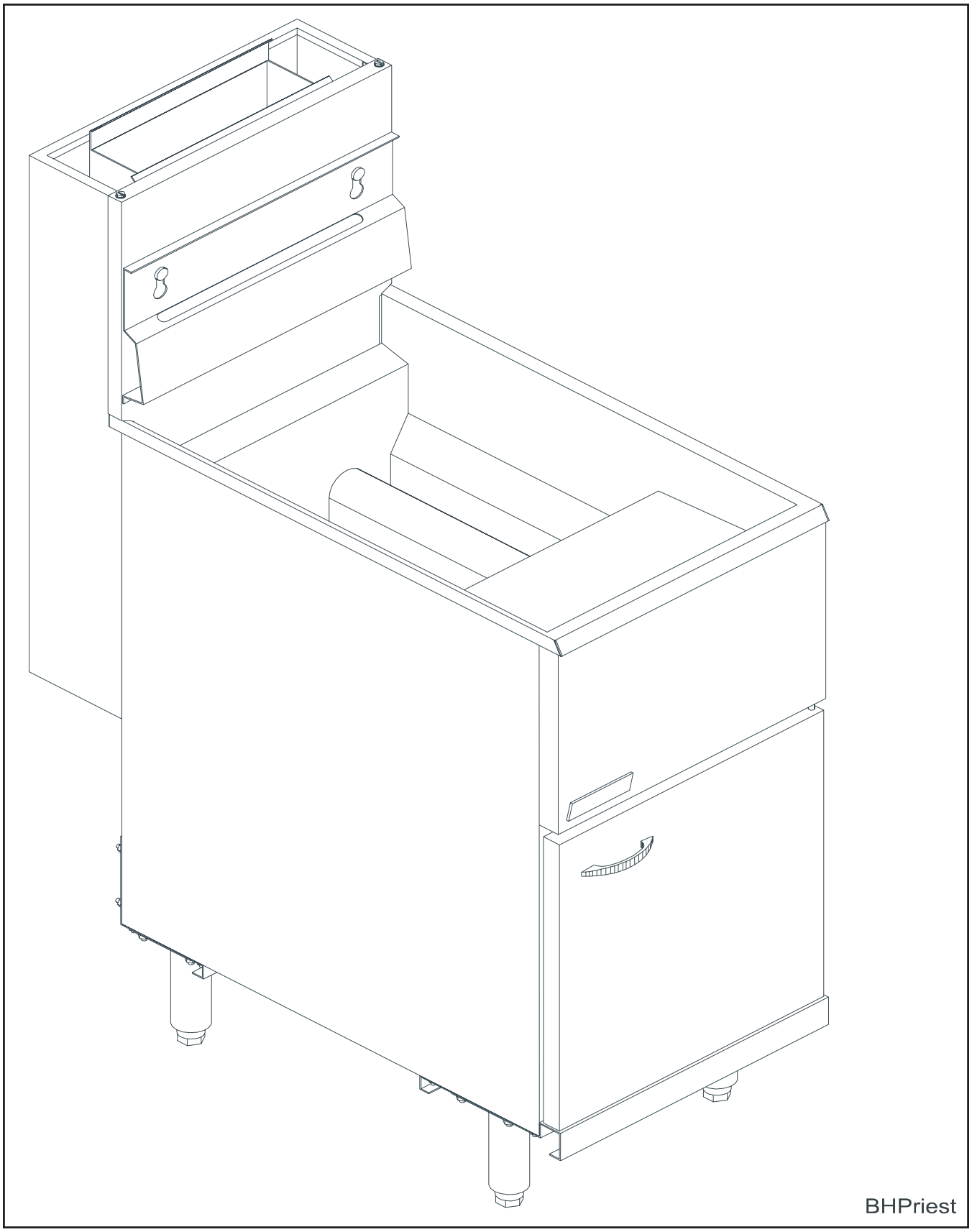

35C+ AND 45C+ FRYER

EXPLOSION PARTS LIST

ITEM #	PART #	PART DESCRIPTION
1	P0075300	SCREW, 10-16 X 5/8 SELF DRILL
2	P0075400	SCREW, 10-24 X 1/2 SELF TAPPING
3	A8000801	MANIFOLD SUPPORT
4	PP11261	BOLT, 5/16 X 3/4 BURNER
5	P0092300	NUT, 10-24 KEP
6	A3323401	CE 35C+ BURNER HEAT SHEILD (NOT SHOWN)

35C+ AND 45C+ FRYER
EXPLOSION

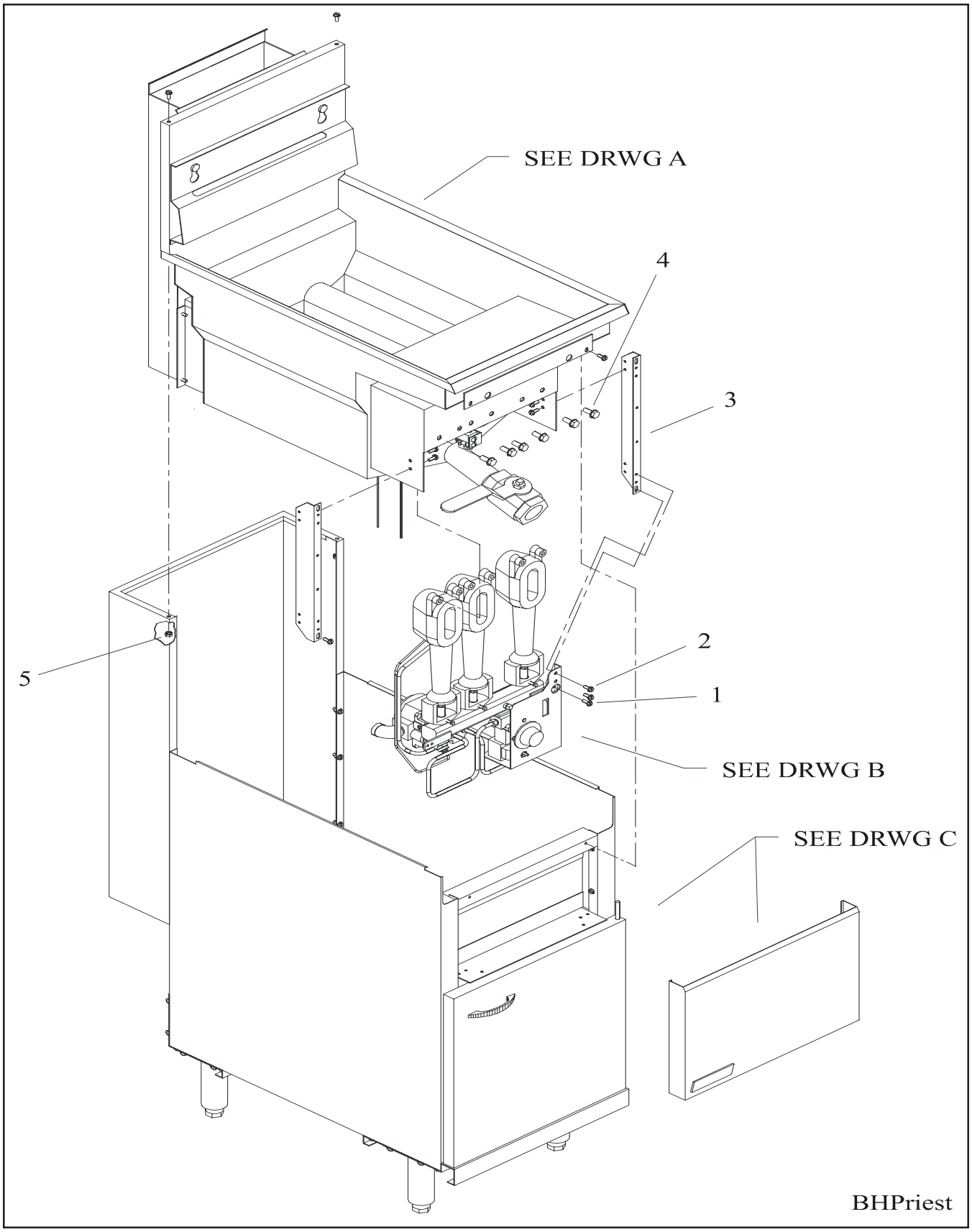

35C+ AND 45C+ FRYER

TANK/FLUE PARTS LIST

ITEM #	PART #	PART DESCRIPTION
1	B3500501	35C+ FLUE PIPE
	B3500601	14C+/45C+ FLUE PIPE (SERIAL # G90J-G98K)
	B3503001	45C+ FLUE PIPE (POST G98L)
2	B3303001	35C+ MILD STEEL TANK
	B3303002	35C+ STAINLESS STEEL TANK
	B3305601	14C+/45C+ MILD STEEL TANK (SERIAL # G90J-G98K)
	B3305602	14C+/45C+ STAINLESS STEEL TANK (SERIAL # G90J-G98K)
	B3321301	45C+ MILD STEEL TANK (POST G98L)
	B3321302	45C+ STAINLESS STEEL TANK (POST G98L)
	B3313501	CE 35C+ MILD STEEL TANK
	B3313502	CE 35C+ STAINLESS STEEL TANK
3	PP10368	1-1/4” DRAIN VALVE
4	P0010400	SCREW, 10-32 X 1/4”
5	P6071449	LP PILOT ASSEMBLY
	P6071450	NAT PILOT ASSEMBLY
6	P5047541	THERMOPILE
	P5047540	CE THERMOCOUPLE
7	P0075400	SCREW, 10-24 X 1/2”
8	A1100111	35C+/45C+ MILD STEEL BASKET HANGER
	A1100112	35C+/45C+ STAINLESS STEEL BASKET HANGER
9	PP11366	SCREW, 10-24 X 5/8”
10	A1401002	HI-LIMIT/T-STAT CLAMP
11	PP10084	HI-LIMIT SWITCH (SEE DRWG B, #13)
12	P5047588	THERMOSTAT (SEE DRWG B, #14)
	P5047590	CE 190° THERMOSTAT(SEE DRWG B, #14)
	B1001702	REPLACEMENT BAFFLES (NOT SHOWN) 3 PER 35C+ 4 PER 14C+ / 45C+

35C+ AND 45C+ FRYER
TANK/FLUE DRAWING

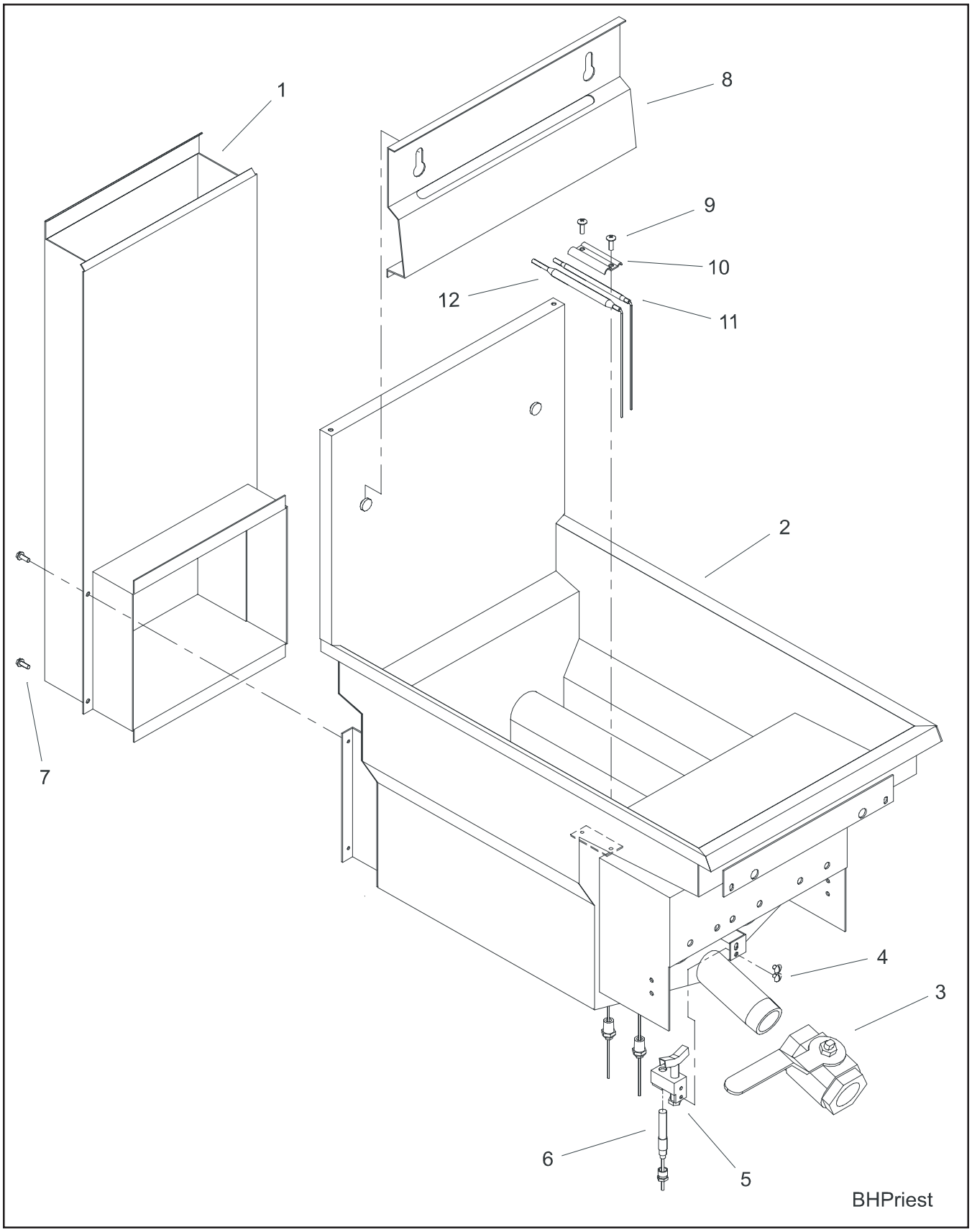

35C+ AND 45C+ FRYER

BURNER / GAS VALVE / CONTROLS PARTS LIST

ITEM #	PART #	PART DESCRIPTION
1	P6071050	35C+ 4” BURNER (X 3)
	P6071051	45C+ 6” BURNER (X 4) & CE G20 35C+ 6” BURNER (X 3)
	PP10853	CE G31 35C+ 6” BURNER (X 3)
2	P0063550	SCREW, 10-24 X 1/2”
3	DOMESTIC ONLY	
	P6071339	35C+ NAT ORIFICE TIP #39
	P6071309	35C+ LP ORIFICE TIP 1/16”
	P6071338	45C+ NAT ORIFICE TIP #38
	P6071353	45C+ LP ORIFICE TIP #53
4	PP10984	ORIFICE SPUD
5	B8019703	35C+ BURNER MANIFOLD W/ SPUDS
	B8019704	45C+ BURNER MANIFOLD W/ SPUDS
6	P7036725	1/8” STEEL PLUG
	60132801	CE PRESSURE TEST PLUG
7	A8002201	35C+ T-STAT OUT TUBING
	A8003601	45C+ T-STAT OUT TUBING
	A8018601	CE 35C+ T-STAT OUT TUBING
8	A8009601	35C+ T-STAT / HI-LIMIT MOUNTING BRACKET
	A8010601	45C+ T-STAT / HI-LIMIT MOUNTING BRACKET
	A8018301	CE 35C+ T-STAT / HI-LIMIT MOUNTING BRACKET
9	P0190700	FASTEX CLIP
10	PP10537	T-STAT KNOB
11	PP10687	SCREW, 6-32 X 5/16”
12	B6779850	HI-LIMIT WIRE
13	PP10084	HI-LIMIT SWITCH
14	P5047588	THERMOSTAT
	P5047590	CE 190° THERMOSTAT
15	A8002101	35C+ T-STAT IN TUBING
	A8003701	45C+ T-STAT IN TUBING
	A8018501	CE 35C+ T-STAT IN TUBING
16	A8002001	35C+ PILOT TUBING
	A7578601	45C+ PILOT TUBING
17	P7037750	1/2” STREET ELBOW
18	P5045642	NAT GAS VALVE
	P5045644	LP GAS VALVE
	PP10955	CE G20 GAS VALVE
	PP11110	CE G31 GAS VALVE
19	P5047541	THERMOPILE
	P5047540	CE THERMOCOUPLE
20	P6071449	LP PILOT ASSEMBLY
	P6071450	NAT PILOT ASSEMBLY
21	P7037095	1/2” X3” NIPPLE
22	PP10618	NUT & FERRULE
	PP10591	FERRULE ONLY

35C+ AND 45C+ FRYER
BURNER / GAS VALVE / CONTROLS DRAWING

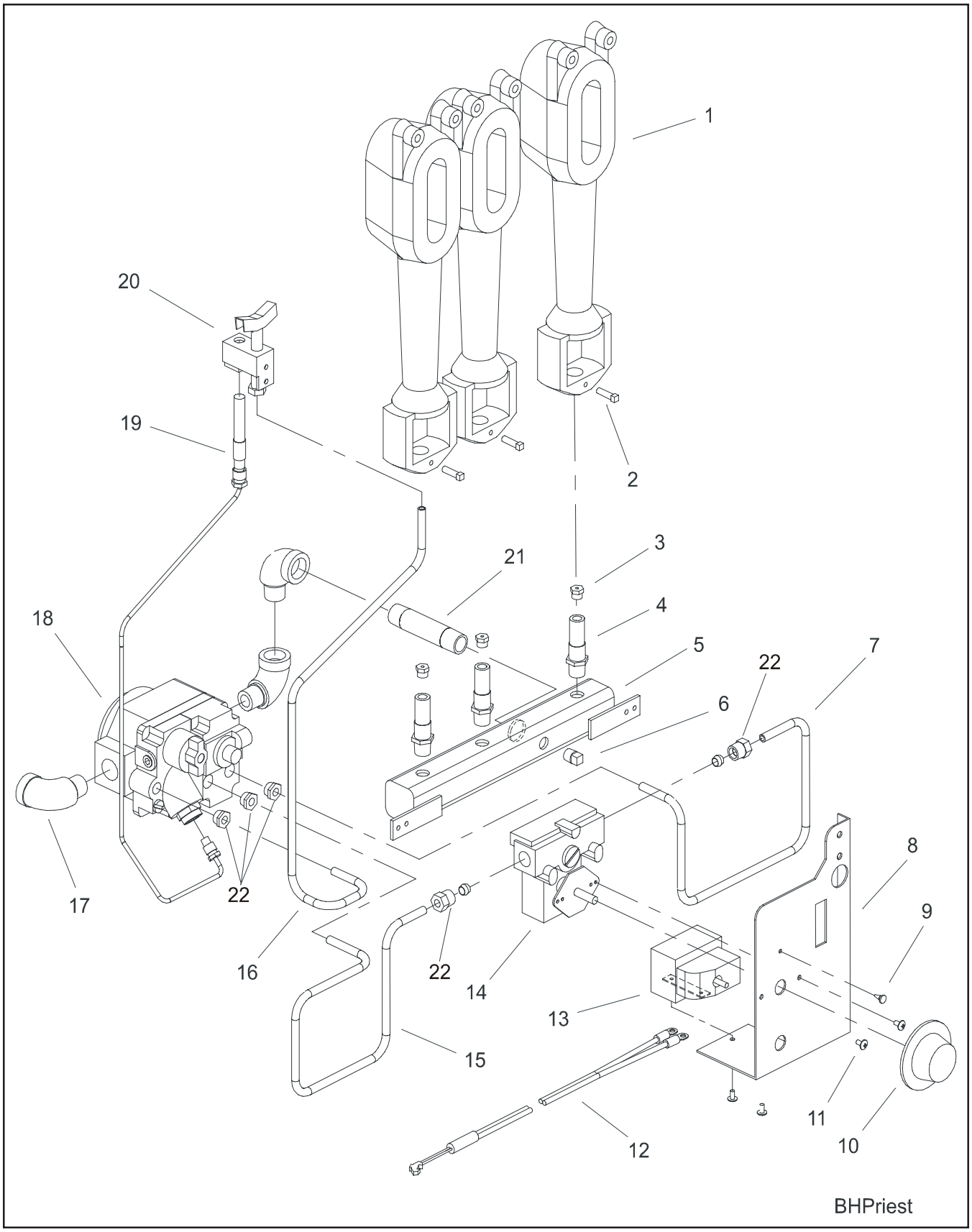

35C+ AND 45C+ FRYER
CABINET PARTS LIST

ITEM #	PART #	PART DESCRIPTION
1		RH CABINET SIDE (PART OF CABINET ASSEMBLY)
2		LH CABINET SIDE (PART OF CABINET ASSEMBLY)
3		FRONT BOTTOM BRACE (PART OF CABINET ASSEMBLY)
4		REAR BOTTOM BRACE (PART OF CABINET ASSEMBLY)
5		FRONT TOP BRACE (PART OF CABINET ASSEMBLY)
6		CABINET BACK (PART OF CABINET ASSEMBLY)
7	P0092300	NUT, 10-24 KEP
8	P0075400	SCREW, 10-24 X 1/2” SELF TAPPING
9	PP11257	GAS SUPPLY TUBE W/ FITTINGS
10	P0092300	BOLT, 1/4-20 X 5/8”
11	P0093300	NUT, 1/4-20
12	P6071300	MAGNET CATCH
13	B2303201	DOOR ASSEMBLY
	P6071516	DOOR HANDLE (NOT SHOWN)
14	A3631402	FRONT PANEL
	B3613503	FRONT PANEL (EGG ROLL)
15	A3800603	DOOR HINGE PIN
16	B3900701	6” LEG SET
	B3901501	6” CASTER SET
17	PP10067	CE SUPPLY ADAPTER(NOT SHOWN)
	B1821601	35C+ / 45C+ COMPLETE GALVINIZED STEEL CABINET
	B1821602	35C+ / 45C+ COMPLETE STAINLESS STEEL CABINET

35C+ AND 45C+ FRYER
CABINET DRAWING

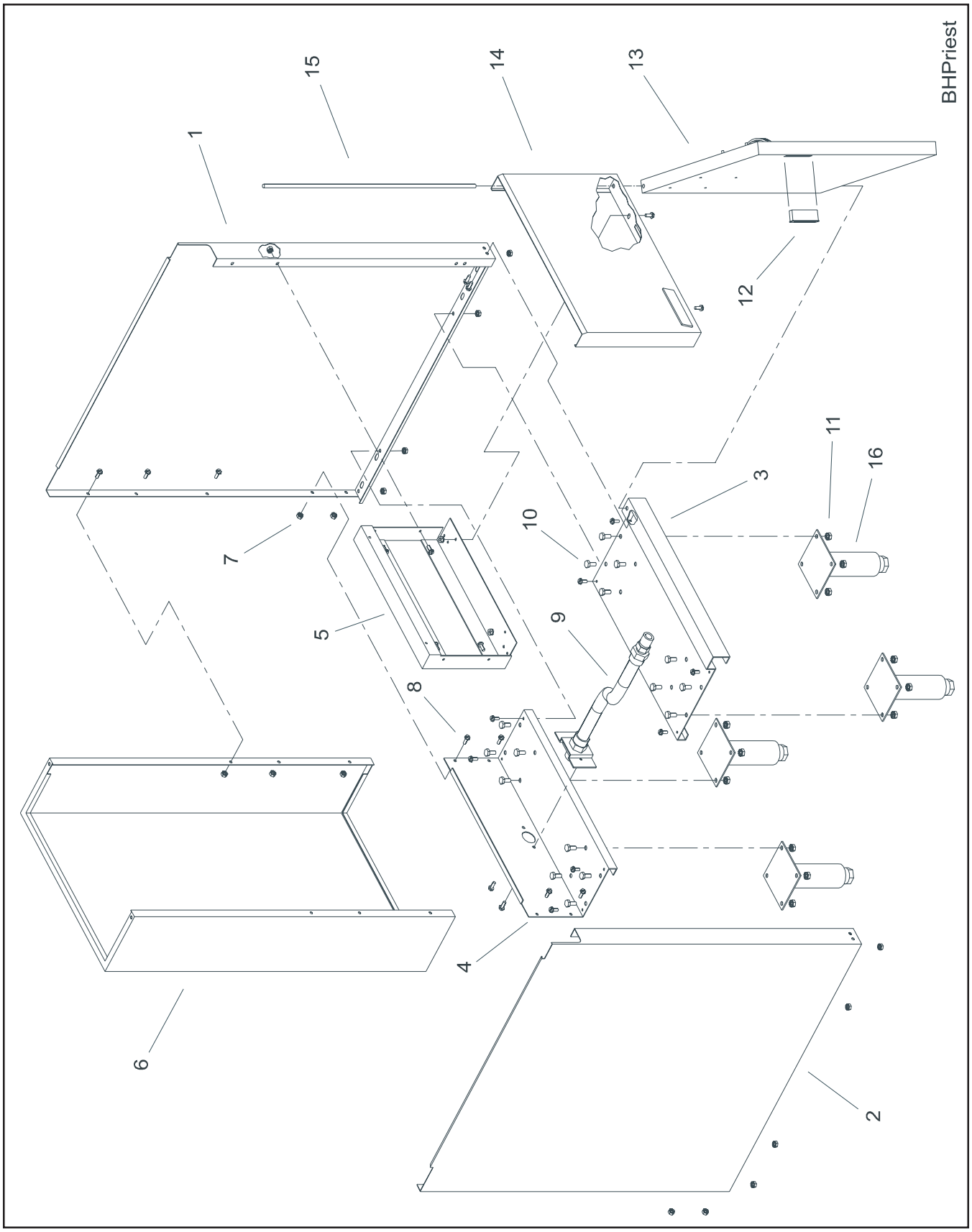

35C+ AND 45C+ FRYER
ACCESSORIES PARTS LISTS

ITEM #	PART #	PART DESCRIPTION
1	B2100106-C	45C+ TANK COVER
	B2100112-C	35C+ TANK COVER
2	B7490701	FRYER CRUMB SCOOP
3	A1101101	MILD STEEL BASKET HANGER
	A1101102	STAINLESS STEEL BASKET HANGER
4	A3301001	FRYER CLEAN OUT ROD
5	PP10434	35C+ TUBE RACK
	P6073148	45C+ TUBE RACK
6	PP10056	ANGLED NYLON BRUSH
	PP10730	STRAIGHT NYLON BRUSH
7	P6072145	REGULAR MESH BASKET
	P6072146	FINE MESH BASKET
8	B3901501	CASTER SET
9	B3900701	LEG SET
10	A3316302-C	CHANNEL STRIP
11	A2510101	DRAIN NIPPLE

35C+ AND 45C+ FRYER
ACCESSORIES DRAWING

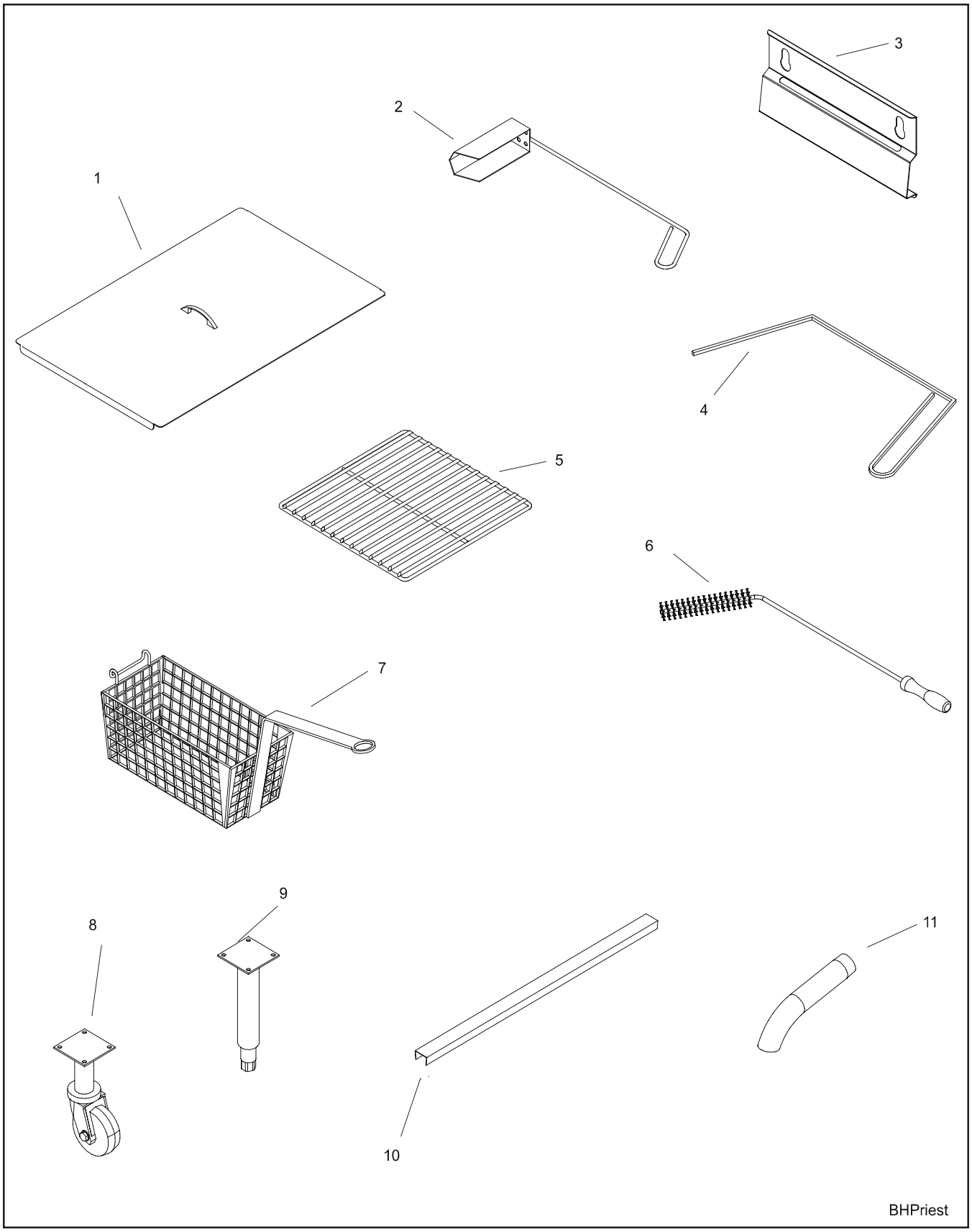

In the event of problems with or questions about your order, please contact the Pitco Frialator factory, from 8:00 a.m. - 5:00 p.m., Eastern Standard Time, Monday through Friday, toll-free at:

(800) 258-3708 US and Canada only or
(603) 225-6680

In the event of problems with or questions about your order, please contact the Pitco Frialator Authorized Service and Parts representative (ASAP) covering your area, through the National Servicre Network at:

(800) 258-1862 US only, 24 hours