SPARE PARTS DIAGRAM FOR

Pizza Oven
FPZ24E

First Choice Group
Blakeney Way, Kingswood Lakeside
Cannock, Staffs, WS11 8LD
TEL: 01543 577778 FAX: 01543504141
Email: enquires@firstchoice-cs.co.uk
Web: www.firstchoice-cs.co.uk

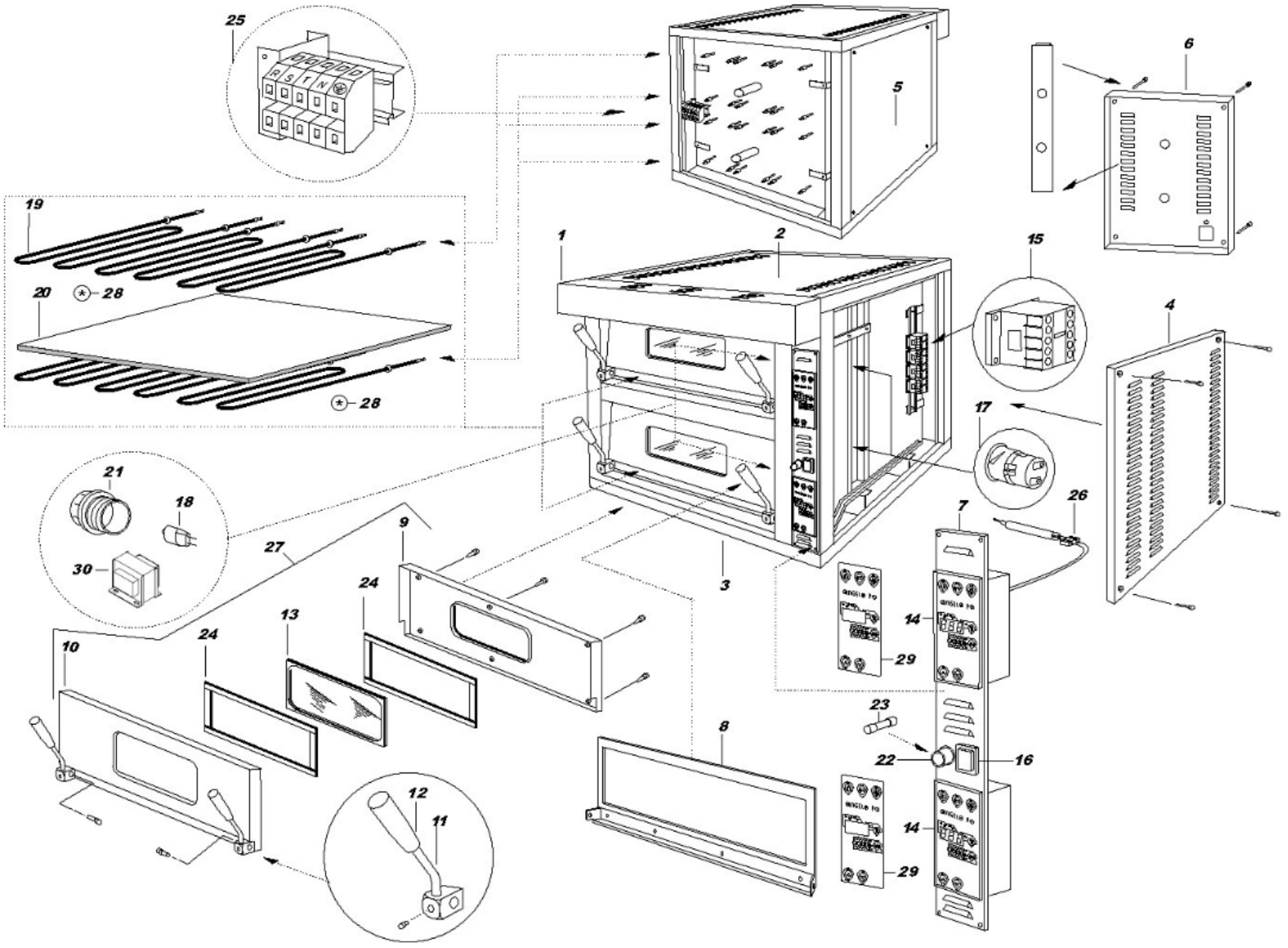
25
A S T N
5
6
19
20
28
28
1
2
15
4
17
21
18
30
27
9
24
13
24
10
3
7
26
14
29
23
22
16
8
12
11
14
29

Code	Description	Validity date
	HOOD	12/01/2000-
	SUPERIOR PANEL	12/01/2000-
	INFERIOR PANEL	12/01/2000-
	RIGHT SIDE PANEL	12/01/2000-
3070160	LEFT SIDE PANEL	12/01/2000-
	REAR PANEL	12/01/2000-
3244090	CONTROL PANEL	12/01/2000-
3021880	ASSEMBLY DOOR FRAME	12/01/2000-
3070240	DOOR INSIDE PART H. 210 mm	12/01/2000-
3070250	DOOR OUTSIDE PART H. 210 mm	12/01/2000-
36M7260	DOORHANDLE METAL	12/01/2000-
36M7270	DOORKNOB	12/01/2000-
37N2350	TEMPERED GLASS 33x12x5	12/01/2000-
32V4790	DIGITAL THERMOREGULATOR	12/01/2000-
32V5040	REMOTE CONTROL 20 A	12/01/2000-
32W3920	LUMINOUS SWITCH 33x22	12/01/2000-
3019720	LAMP HOLDER	01/02/2003-
3030661	HALOGEN LAMP	01/02/2003-
32G3060	HEATING EL.	12/01/2000-
3011660	REFRACTORY PLATE 605x610x14	12/01/2000-
3019730	GLASS	01/02/2003-
32V5070	FUSE HOLDER	12/01/2000-
32V5080	FUSE	12/01/2000-
37Q4440	FITTING FOR GLASS	12/01/2000-
32V5050	ELECTRICAL TERMINALS	12/01/2000-
32V4920	THERMAL RESISTOR	12/01/2000-
3091830	DOOR ASS. Y	12/01/2000-
3069900	SUPPORT	12/01/2000-
3024100	PLASTIC COATED PANEL	12/01/2000-
3008770	TRANSFORMER	01/02/2003-