SPARE PARTS DIAGRAM FOR

ANGELO PO

Dish/Glass Washer
C207D

First Choice Group
Blakeney Way, Kingswood Lakeside
Cannock, Staffs, WS11 8LD
TEL: 01543 577778 FAX: 01543504141
Email: enquires@firstchoice-cs.co.uk
Web: www.firstchoice-cs.co.uk

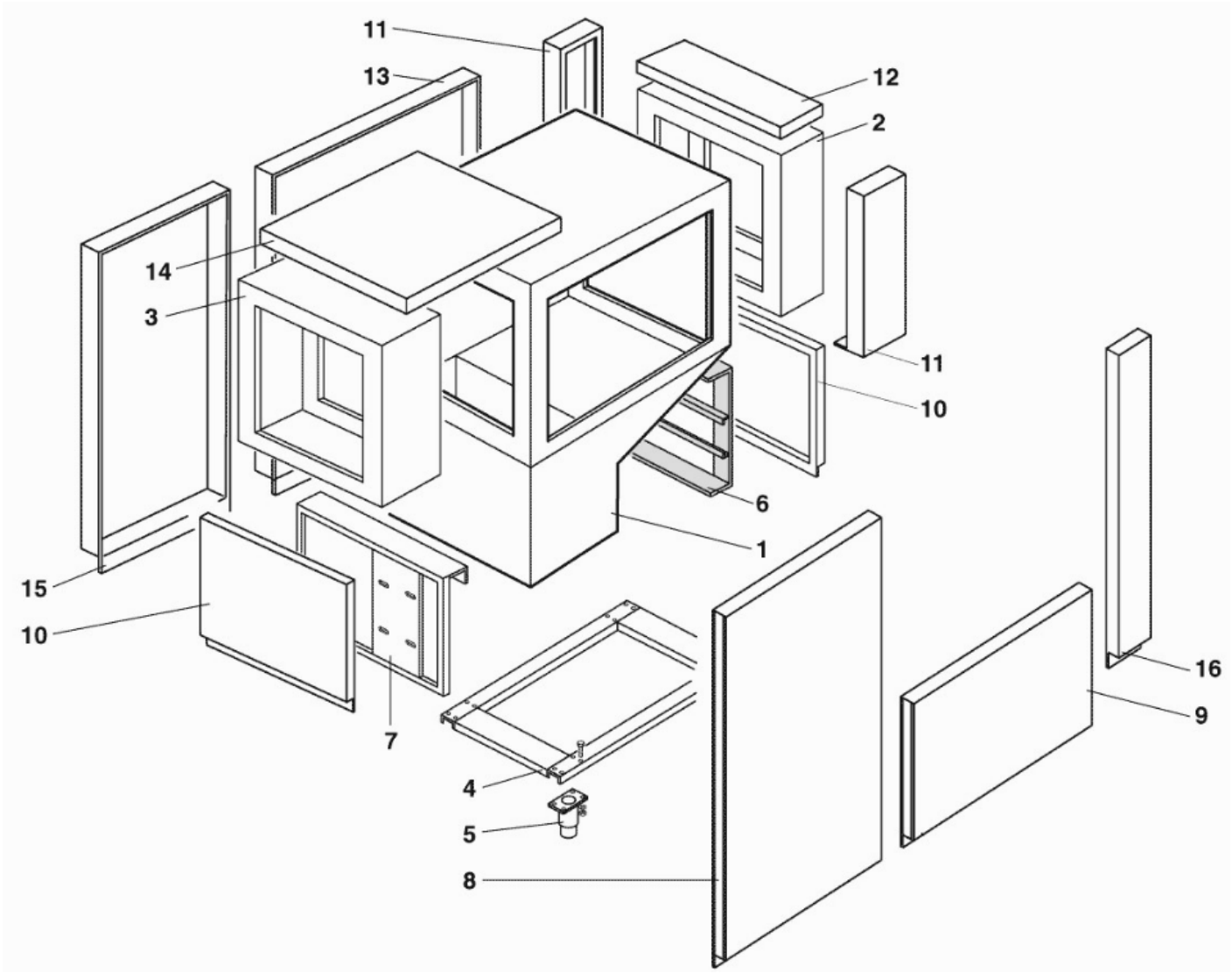
11
13
12
2
14
3
11
10
6
1
15
10
16
9
7
4
5
8

Code	Description	Validity Date
	HOOD	01/12/1999-
3022350	HOOD	01/12/1999-
	HOOD	01/12/1999-
	FRAME	01/12/1999-
36Q0940	STAINLESS STEEL FOOT	01/12/1999-
	TANK SUPPORT FRAME	01/12/1999-
	SPEED REDUCER SUPPORT	01/12/1999-
	INTERMEDIATE PANEL	01/12/1999-
3024060	FRONT PANEL WASHING TAN	01/12/1999-
	SIDE PANEL	01/12/1999-
	SIDE PANEL SPRAY-GARD H	01/12/1999-
	UPPER SIDE PANEL S.-G.	01/12/1999-
3008030	BACK PANEL WASHING	01/12/1999-
	UPPER SIDE PANEL	01/12/1999-
	BACK PANEL RINSE	01/12/1999-
3024070	FRONT PANEL	01/12/1999-

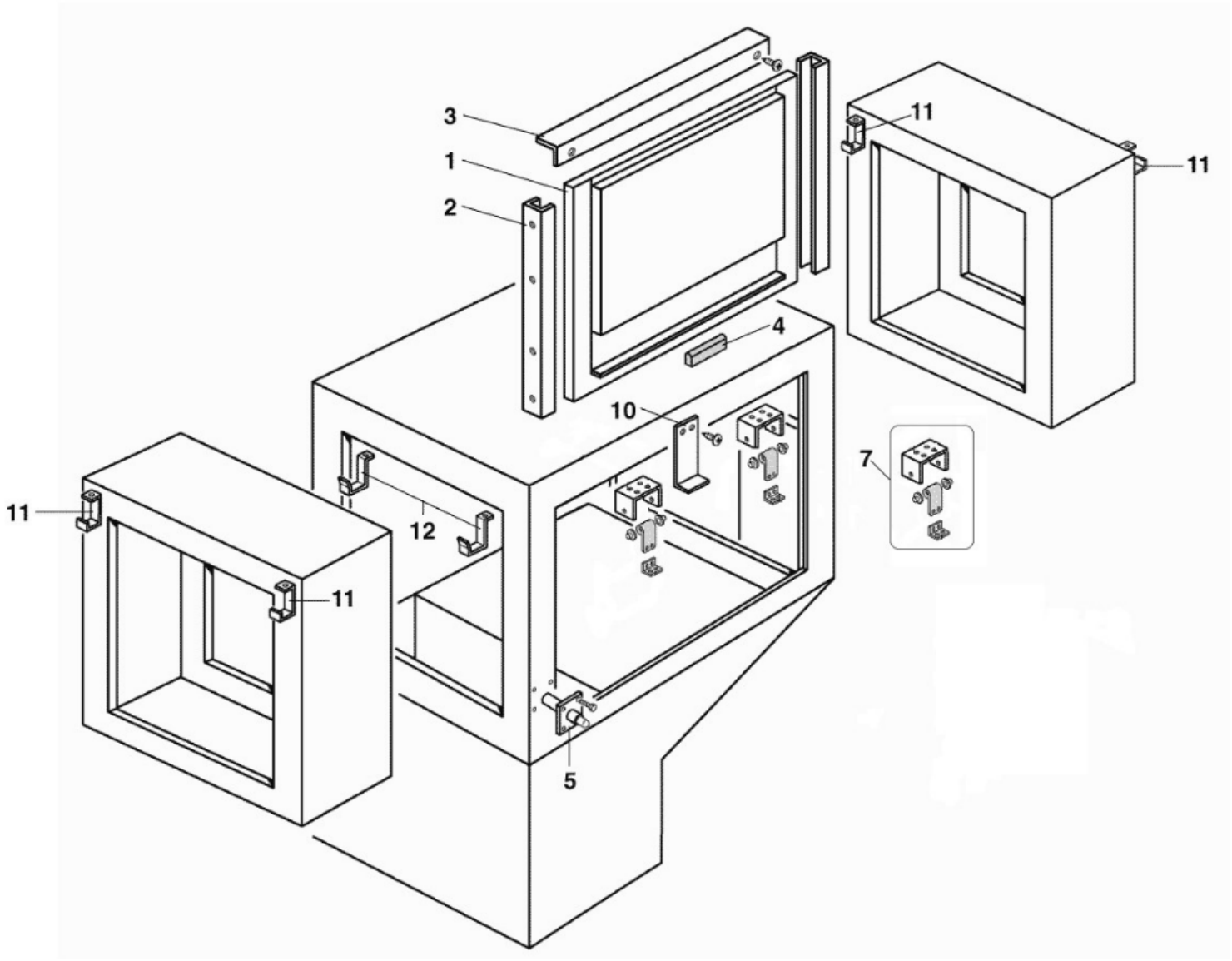
3
1
2
11
11
4
10
7
11
12
11
5

Code	Description	Validity Date
30G3380	DOOR	01/12/1999-
3081360	GUIDE	01/12/1999-
3042800	SPRAY-GUARD	01/12/1999-
32W0870	MAGNET	01/12/1999-
36U0180	SAFETY DOOR CATCH	01/12/1999-
36G8740	SPRING	01/12/1999-
3AT1470	SPRING LOCK	01/12/1999-
3027270	BRACKET CURTAIN	01/12/1999-
3037880	BRACKET CURTAIN	01/12/1999-

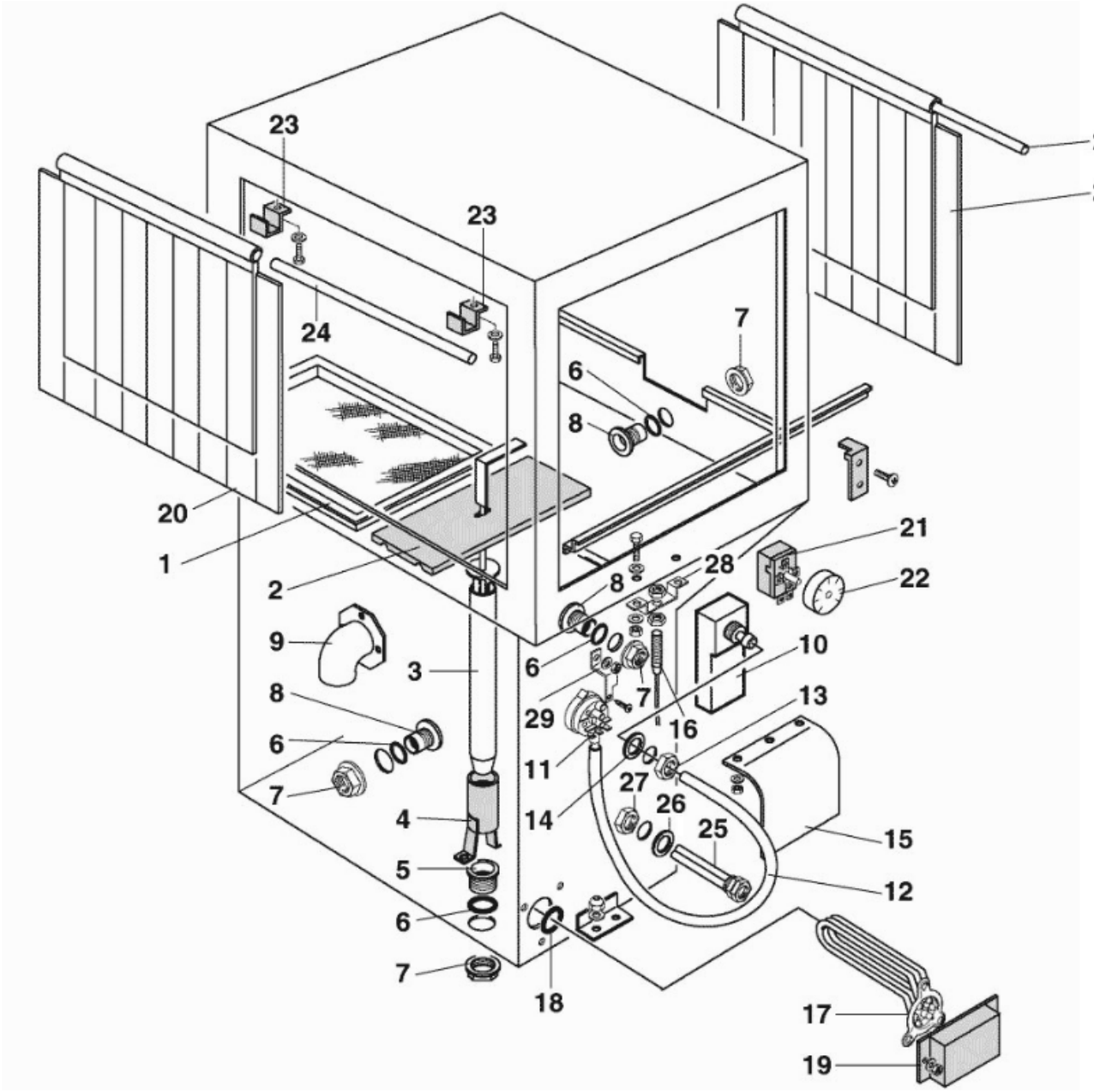

23
23
24
24
20
20
1
2
7
6
8
21
22
28
8
9
3
6
10
7
29
13
8
16
6
11
7
27
26
4
14
25
15
5
12
6
7
18
17
19

Code	Description	Validity Date
35Q9300	FILTER 275X445	01/12/1999-31/12/1999
30Q2810	FILTER 330x255	01/01/2000-
3041300	CROSS PIECE	01/12/1999-
33D2880	RODDED OVERFLOW H=430	01/12/1999-
30T2720	OVER FLOW GUIDE	01/12/1999-
33Q4740	"DRAIN CONNECTION 1""1/4"	01/12/1999-
3151930	O-RING	01/12/1999-
33Q2160	RING NUT	01/12/1999-
33Q2290	"DRAIN CONNECTION 1""1/4"	01/12/1999-
33Q4290	ONTAKE PIPE FITTING	01/12/1999-
33D1390	AIR TRAP	01/12/1999-
32Z8880	PRESSURE-SWITCH 90/120	01/12/1999-06/01/2015
32V1870	PRESSURE-SWITCH 35/90	07/01/2015-
131AA08	H0SE	01/12/1999-
33Q2190	RING NUT	01/12/1999-
3151890	GASKET	01/12/1999-
	RUBBER COVER	01/12/1999-
32Z8650	MAGNETIC REED	01/12/1999-
32G2170	HEATING ELEMENT 8000W	01/12/1999-
3152160	OR RING	01/12/1999-
3FL0216	HEATING COVER	01/12/1999-
36Z0720	SPLASH GUARD CURTAIN 640XH=410	01/12/1999-
32Z8840	THERMOSTAT 30-90C	01/12/1999-
36M2830	HANDLE	01/12/1999-
3037880	BRACKET CURTAIN	01/12/1999-
36G7580	SHAFT	01/12/1999-
30Q1070	BULB HOLDER	01/12/1999-
37Q2840	GASKET	01/12/1999-
3201840	LOCK NUT 1/2"	01/12/1999-
35Q9260	REED BRACKET	01/12/1999-
	PRESSURE SWITCH SUPP.	01/12/1999-

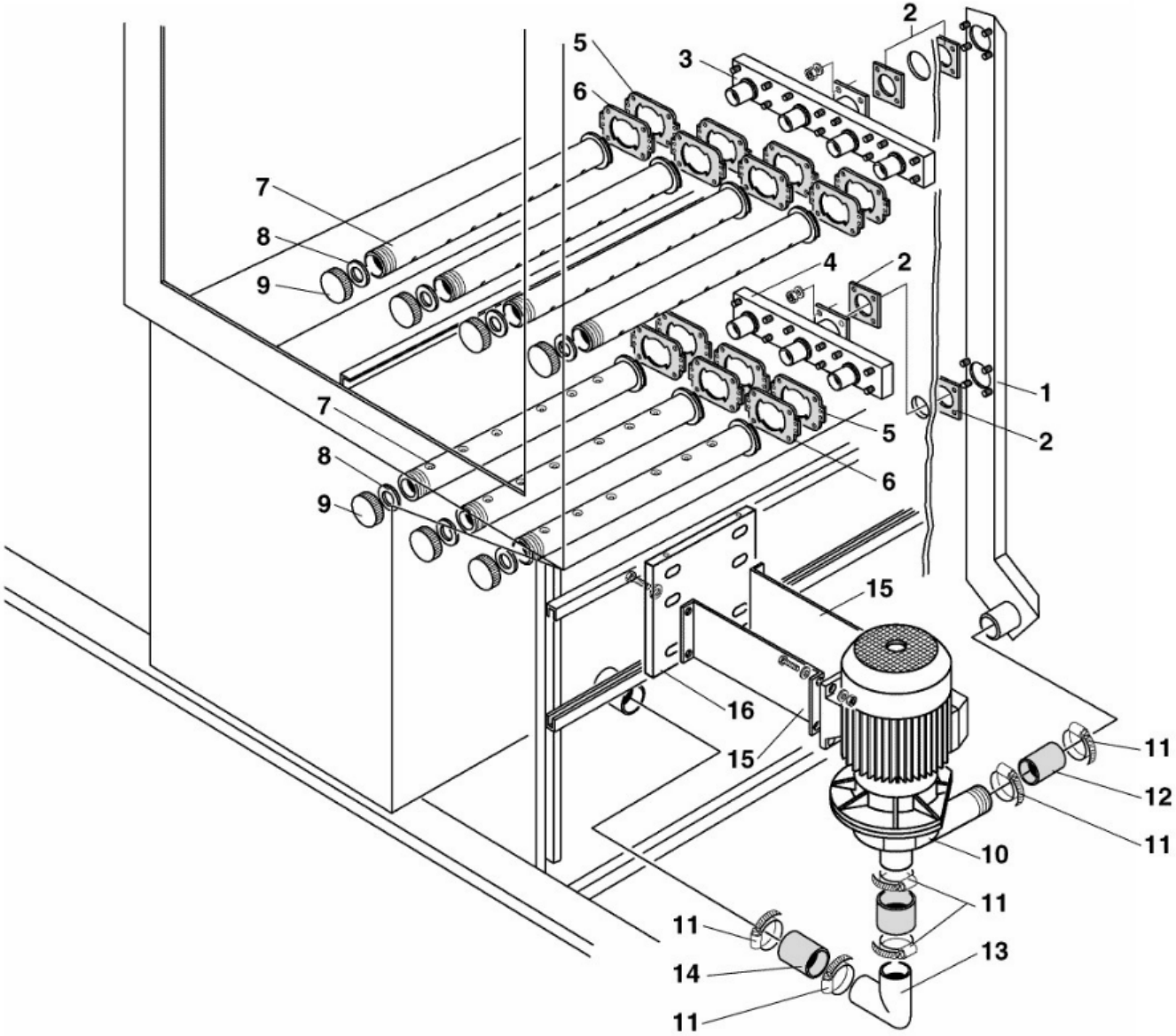
2
5
3
6
7
8
9
4
2
1
7
5
2
8
6
9
15
16
15
11
12
11
10
11
11
13
14
11

Code	Description	Validity Date
	WASHING PIPE	01/12/1999-
3151900	GASKET	01/12/1999-
30Z2650	UPPER WASHING PIPE	01/12/1999-
30Z2660	LOWER WASHING PIPE	01/12/1999-
36G9390	FLANGE	01/12/1999-
36G9400	FLANGE COUPLING	01/12/1999-
30Z2670	U/L WASHING PIPE	01/12/1999-
3151980	GASKET	01/12/1999-31/12/2001
3152780	GASKET	01/01/2002-
36Q0970	PLASTIC PLUG	01/12/1999-31/12/2001
36Q1930	PLUG INOX	01/01/2002-
32M4830	PUMP	01/12/1999-
3022220	CLAMP	01/12/1999-
33M1330	OUTLET ELBOW L=170 ØI50 ØE60	01/12/1999-
33Q4630	PIPE FITTING INOX	01/12/1999-31/12/2003
33M1290	RUBBER INTAKE PIPE FITTING	01/01/2004-
33M1450	ELBOW L=170 ØI60 ØE70	01/12/1999-
	SPACER	01/12/1999-
3022210	PLATE	01/12/1999-

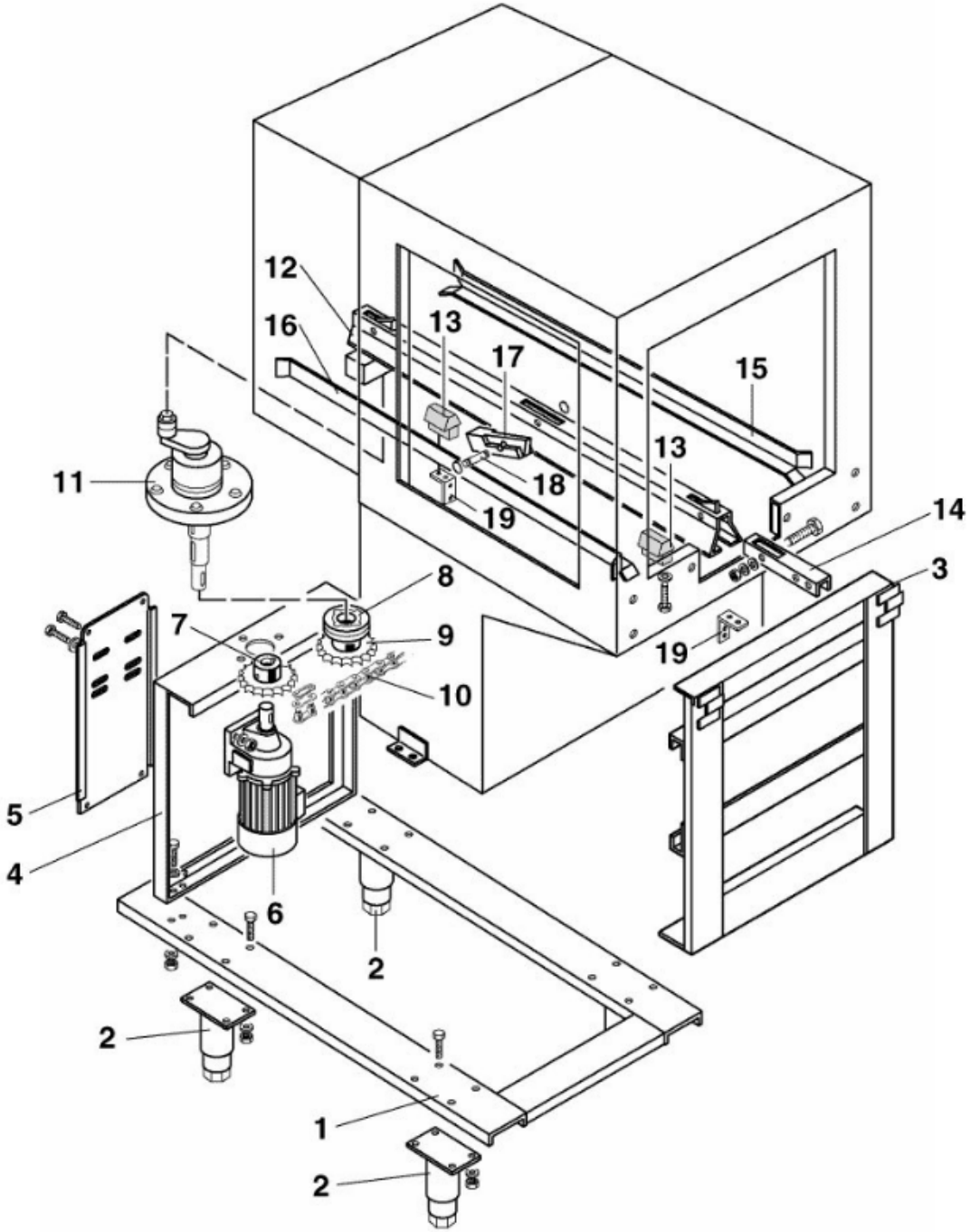
12
16
13
17
15
13
11
18
19
14
3
8
7
9
19
10
5
4
6
2
2
1
2

Code	Description	Validity Date
	FRAME	01/12/1999-
36Q0940	STAINLESS STEEL FOOT	01/12/1999-
	TANK SUPPORT FRAME	01/12/1999-
	SPEED REDUCER SUPPORT	01/12/1999-
	SPEED REDUCER PLATE	01/12/1999-
32M4850	SPEED REDUCER 380V	01/12/1999-
32M4880	SPEED REDUCER	01/12/1999-
3345050	SPEED REDUCER 415V	01/12/1999-
3245300	SPROCKET Z14	01/12/1999-
36G7700	SPROCKET	01/12/1999-
36G7710	SPROCKET	01/12/1999-
36G7540	TORQUE LIMITER	01/12/1999-
36G7690	GEAR	01/12/1999-
36G8330	"CHAIN P= 1/2"" (C304+CS243+CS37"	01/12/1999-
36G8880	"CHAIN P= 1/2"" (C165/C92)"	01/12/1999-
36G8890	CHAIN (C207)	01/12/1999-
36G7590	TOWING GEAR	01/12/1999-
3033820	PAWL BAR	01/12/1999-
30T3390	GUIDE SUPPORT	01/12/1999-
3033830	CONNECTION GUIDE	01/12/1999-
30T7240	RIGHT BASKET GUIDE	01/12/1999-
30T7250	LEFT BASKET GUIDE	01/12/1999-
36G7550	PAWL	01/12/1999-
33Q2830	PIN	01/12/1999-
	CENTRAL STANCHION	01/12/1999-

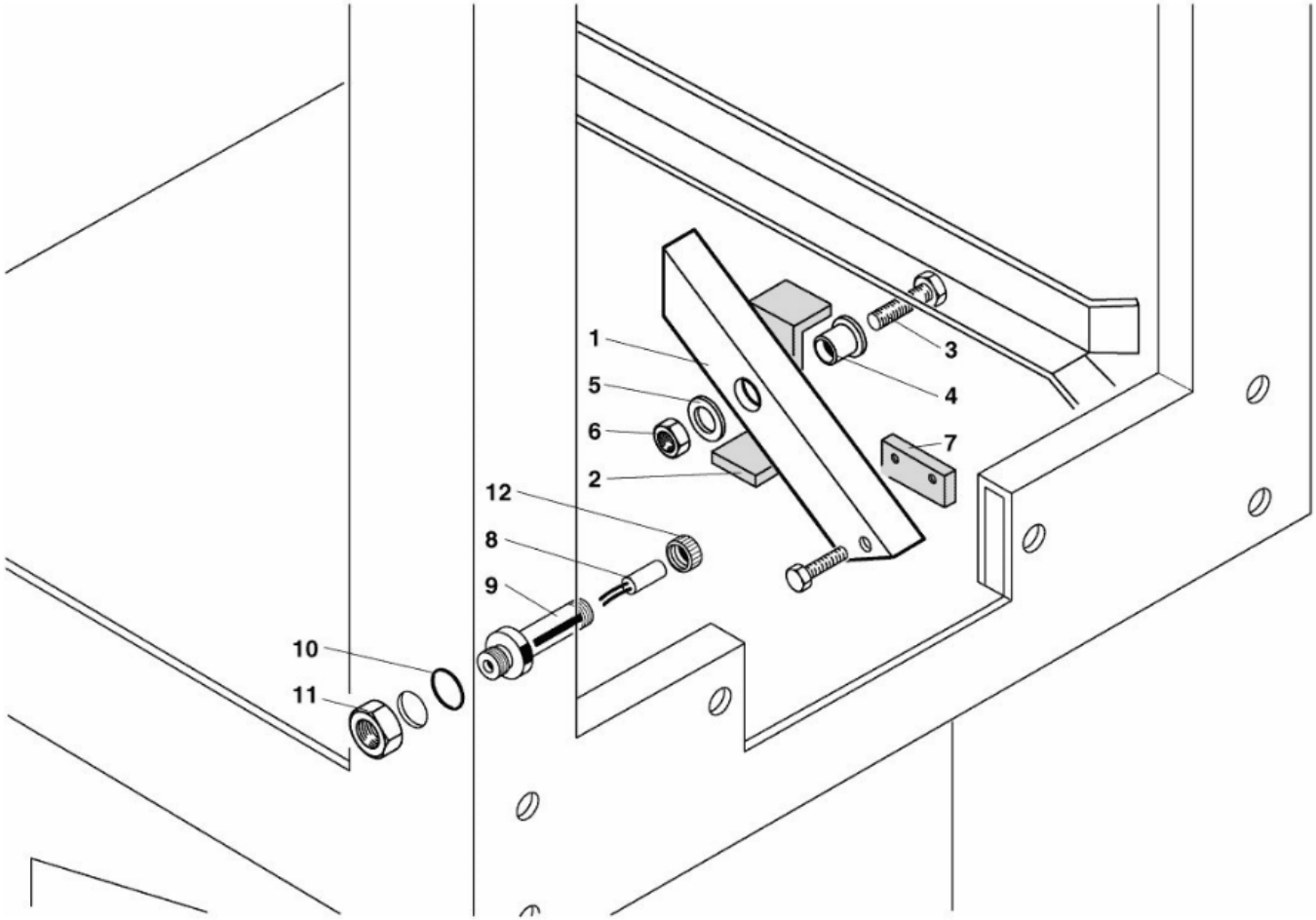
1
5
6
2
12
8
9
10
11
3
4
7

Code	Description	Validity Date
36H0780	ACTUATOR	01/12/1999-
35U2230	ECONOMISER BRACKET	01/12/1999-
31A9660	SCREW	01/12/1999-
36G9450	BEARING	01/12/1999-
3123670	WASHER	01/12/1999-
3110050	STEEL NUT M8X6.5	01/12/1999-
32W0870	MAGNET	01/12/1999-
32Z8650	MAGNETIC REED	01/12/1999-
35W5190	COVER MAGNET	01/12/1999-
3152170	O-RING	01/12/1999-
33Q2190	RING NUT	01/12/1999-
36Q1650	PLUG	01/12/1999-

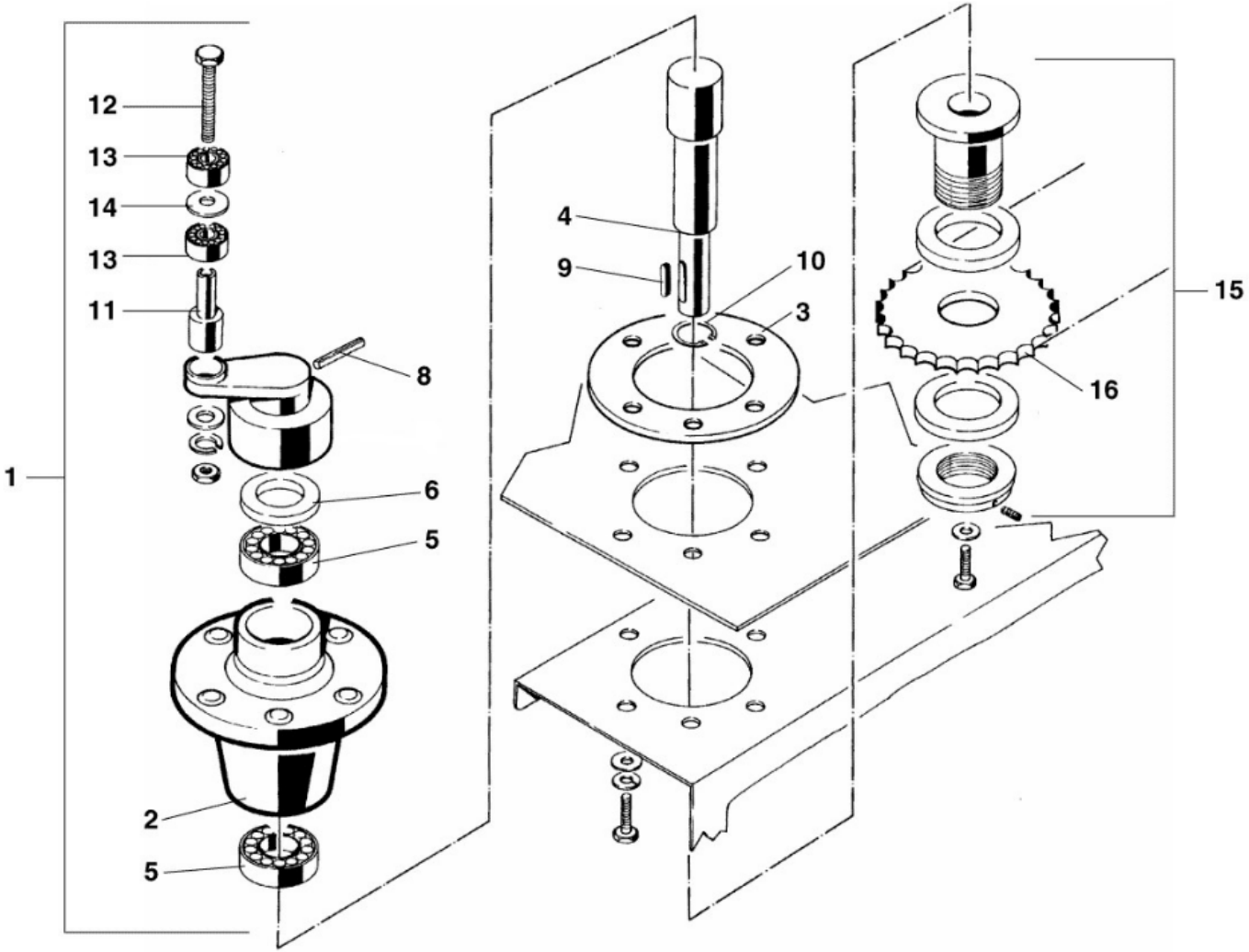
12
13
14
13
11
8
1
6
5
2
5
4
9
10
3
15
16

Code	Description	Validity Date
36G7590	TOWING GEAR	01/12/1999-
33Q2630	HUB	01/12/1999-
37Q1640	GASKET	01/12/1999-
33Q2350	SHAFT	01/12/1999-
36G7500	BALL BEARING	01/12/1999-
3151940	SEAL	01/12/1999-
3022020	ROLL PIN	01/12/1999-
3191110	KEY 6X6X25	01/12/1999-
3120950	SEEGER Ø20	01/12/1999-
36H0210	PIN	01/12/1999-
3104860	STEEL SCREW M8x70	01/12/1999-
36G7510	BEARING	01/12/1999-
3120420	WASHER	01/12/1999-
36G7540	TORQUE LIMITER	01/12/1999-
36G7690	GEAR	01/12/1999-

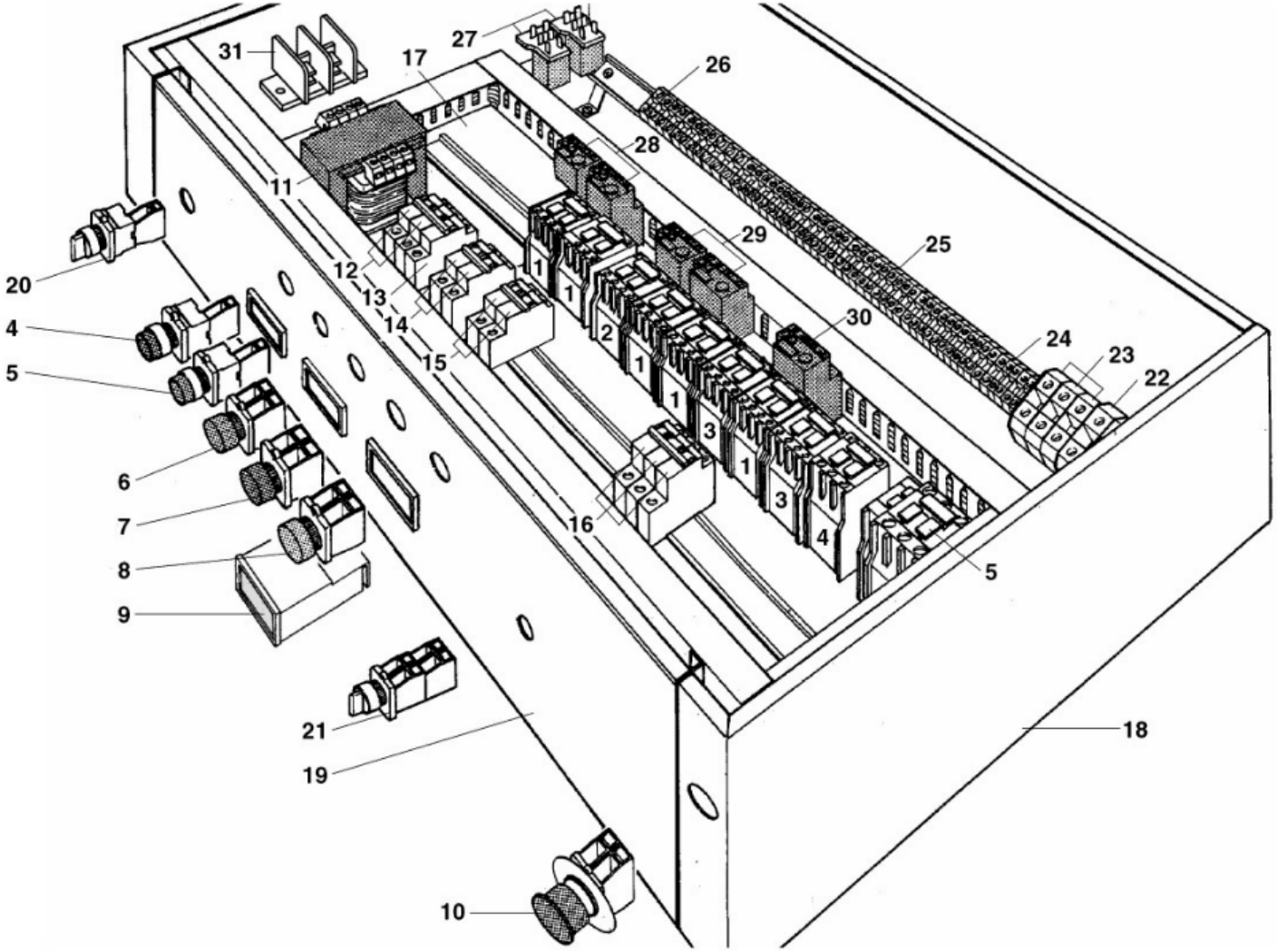
31
17
27
26
28
11
29
25
20
12
13
14
15
30
24
23
22
4
5
6
7
8
9
16
5
21
19
18
10

Code	Description	Validity Date
32Z8680	CONTACTOR	01/12/1999-
3004890	CONTACTOR	01/12/1999-
3059490	CONTACTOR	01/12/1999-
32W4000	STOP PUSH BUTTON	01/12/1999-
32W4010	START PUSH BUTTON	01/12/1999-
32W1720	GREEN LIGHT	01/12/1999-
32W1710	RED LIGHT	01/12/1999-
32W1700	YELLOW LIGHT	01/12/1999-
32Z8250	DIGITAL THERMOMETER	01/12/1999-
32W1750	MAIN STOP PUSH BUTTON	01/12/1999-
32Z8800	TRANSFORMER	01/12/1999-
32Z9020	SWITCH	01/12/1999-
32Z9040	SWITCH	01/12/1999-
32Z8580	MAIN SWITCH	01/12/1999-
32Z8600	MAIN SWITCH	01/12/1999-
32Z8590	MAIN SWITCH	01/12/1999-
	ELECTRIC COMP. SUPPORT	01/12/1999-
	CABINET	01/12/1999-
	CONTROL PANEL	01/12/1999-
32Z8670	SWITCH	01/12/1999-
32Z8470	SWITCH	01/12/1999-
3069840	TERMINAL BOARD	01/12/1999-
3002540	TERMINAL	01/12/1999-
32V4940	TERMINAL 10 mm	01/12/1999-
3246960	TERMINAL	01/12/1999-
	TERMINAL	01/12/1999-
32Z8640	RELAY	01/12/1999-
32Z8740	OVERLOAD RELAY 1,25÷2A	01/12/1999-14/04/2016
32Z8700	OVERLOAD RELAY	15/04/2016-
32Z8710	OVERLOAD RELAY	01/12/1999-
32Z8780	OVERLOAD RELAY 4-6A	01/12/1999-
	TERMINAL	01/12/1999-