SPARE PARTS DIAGRAM FOR

ANGELO PO

Dish/Glass Washer
C304AS

First Choice Group
Blakeney Way, Kingswood Lakeside
Cannock, Staffs, WS11 8LD
TEL: 01543 577778 FAX: 01543504141
Email: enquires@firstchoice-cs.co.uk
Web: www.firstchoice-cs.co.uk

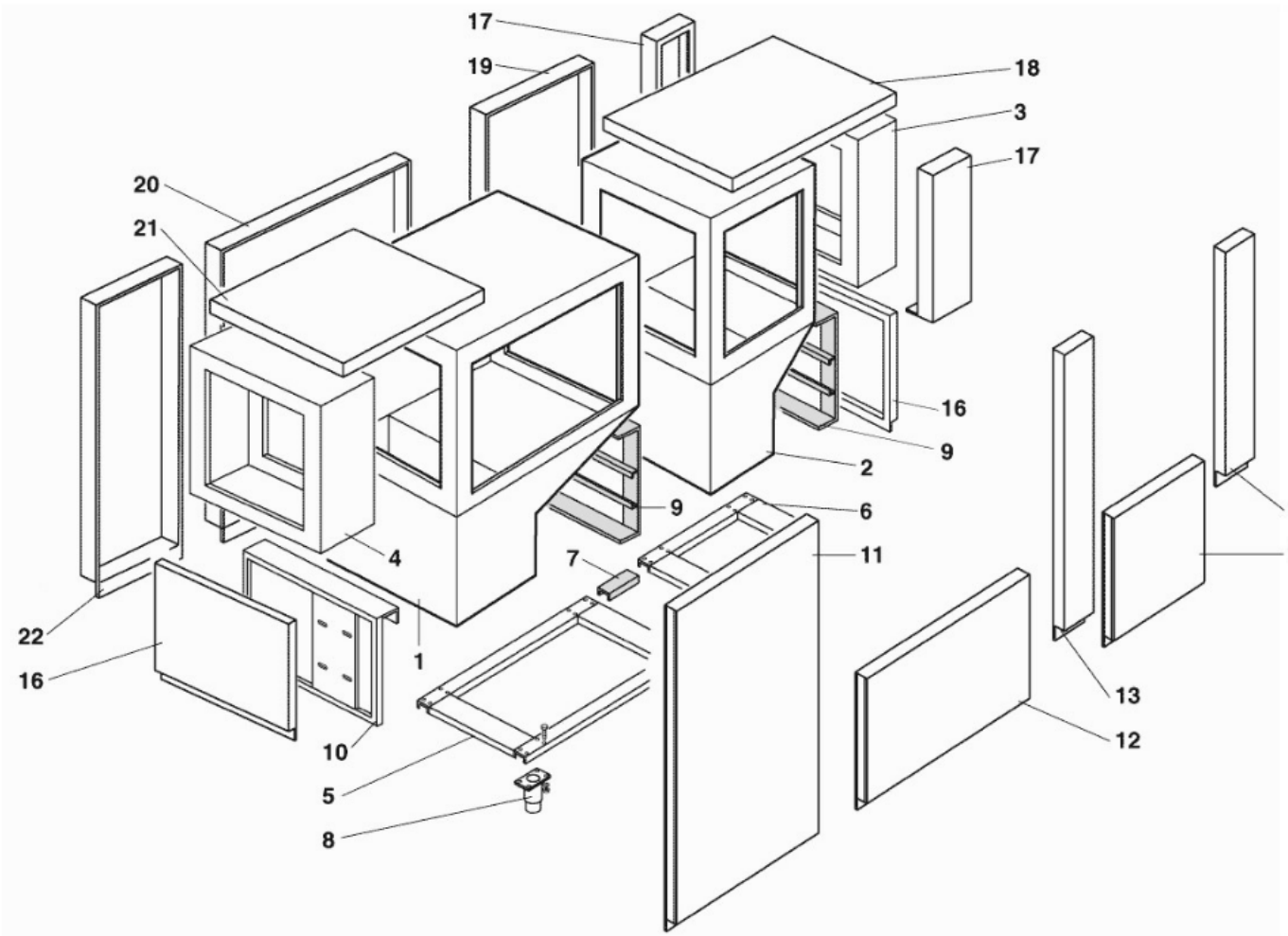
17
19
18
3
17
20
21
16
9
2
9
6
15
4
7
11
14
22
1
16
13
12
10
5
8

Code	Description	Validity Date
	HOOD	01/12/1999-
	HOOD	01/12/1999-
3022350	HOOD	01/12/1999-
	HOOD	01/12/1999-
	FRAME	01/12/1999-
	FRAME	01/12/1999-
	CONNECTION FRAME	01/12/1999-
36Q0940	STAINLESS STEEL FOOT	01/12/1999-
	TANK SUPPORT FRAME	01/12/1999-
	SPEED REDUCER SUPPORT	01/12/1999-
	INTERMEDIATE PANEL	01/12/1999-
3024060	FRONT PANEL WASHING TAN	01/12/1999-
	FRONT PANEL	01/12/1999-
	FRONT PANEL PREWAS. TAN	01/12/1999-
3024070	FRONT PANEL	01/12/1999-
	SIDE PANEL	01/12/1999-
	SIDE PANEL SPRAY-GARD H	01/12/1999-
	UPPER SIDE PANEL S.-G.	01/12/1999-
	BACK PANEL PREWASHING	01/12/1999-
3008030	BACK PANEL WASHING	01/12/1999-
	UPPER SIDE PANEL	01/12/1999-
	BACK PANEL RINSE	01/12/1999-

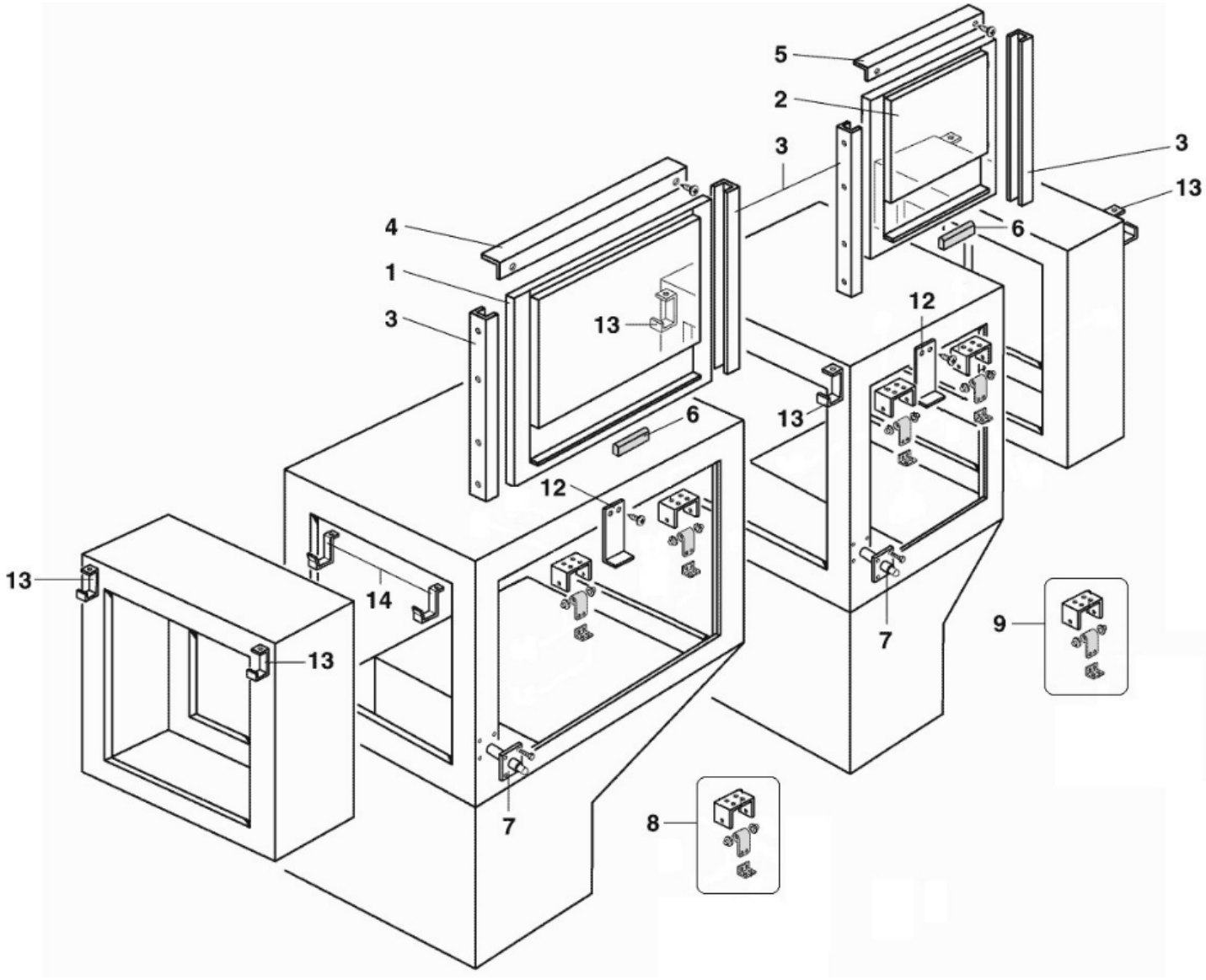
5
2
3
3
13
4
6
1
12
3
13
13
6
12
13
14
13
7
9
7
8

Code	Description	Validity Date
30G3380	DOOR	01/12/1999-
3246290	DOOR	01/12/1999-
3081360	GUIDE	01/12/1999-
3042800	SPRAY-GUARD	01/12/1999-
3246300	SPRAY-GUARD	01/12/1999-
32W0870	MAGNET	01/12/1999-
36U0180	SAFETY DOOR CATCH	01/12/1999-
36G8740	SPRING	01/12/1999-
36G8750	SPRING	01/12/1999-
3AT1470	SPRING LOCK	01/12/1999-
3027270	BRACKET CURTAIN	01/12/1999-
3037880	BRACKET CURTAIN	01/12/1999-

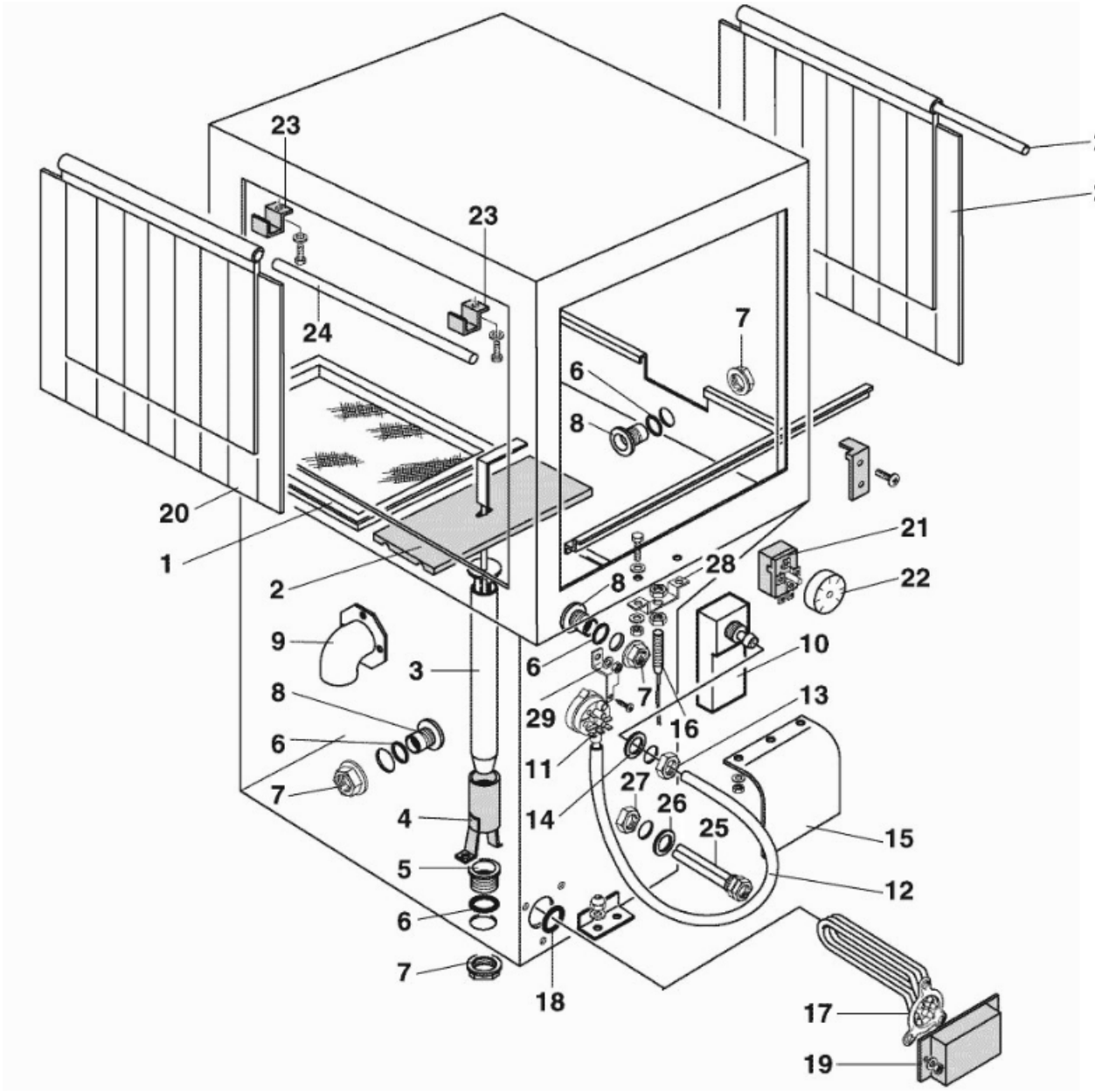

23
23
24
24
20
20
1
2
7
6
8
21
22
28
8
9
3
6
10
7
29
16
13
8
6
11
27
7
14
26
25
15
4
5
12
6
7
18
17
19

Code	Description	Validity Date
35Q9300	FILTER 275X445	01/12/1999-31/12/1999
30Q2810	FILTER 330x255	01/01/2000-
3041300	CROSS PIECE	01/12/1999-
33D2880	RODDED OVERFLOW H=430	01/12/1999-
30T2720	OVER FLOW GUIDE	01/12/1999-
33Q4740	"DRAIN CONNECTION 1""1/4"	01/12/1999-
3151930	O-RING	01/12/1999-
33Q2160	RING NUT	01/12/1999-
33Q2290	"DRAIN CONNECTION 1""1/4"	01/12/1999-
33Q4290	ONTAKE PIPE FITTING	01/12/1999-
33D1390	AIR TRAP	01/12/1999-
32Z8880	PRESSURE-SWITCH 90/120	01/12/1999-06/01/2015
32V1870	PRESSURE-SWITCH 35/90	07/01/2015-
131AA08	H0SE	01/12/1999-
33Q2190	RING NUT	01/12/1999-
3151890	GASKET	01/12/1999-
	RUBBER COVER	01/12/1999-
32Z8650	MAGNETIC REED	01/12/1999-
32G2170	HEATING ELEMENT 8000W	01/12/1999-
3152160	OR RING	01/12/1999-
3FL0216	HEATING COVER	01/12/1999-
36Z0720	SPLASH GUARD CURTAIN 640XH=410	01/12/1999-
32Z8840	THERMOSTAT 30-90C	01/12/1999-
36M2830	HANDLE	01/12/1999-
3037880	BRACKET CURTAIN	01/12/1999-
36G7580	SHAFT	01/12/1999-
30Q1070	BULB HOLDER	01/12/1999-
37Q2840	GASKET	01/12/1999-
3201840	LOCK NUT 1/2"	01/12/1999-
35Q9260	REED BRACKET	01/12/1999-
	PRESSURE SWITCH SUPP.	01/12/1999-

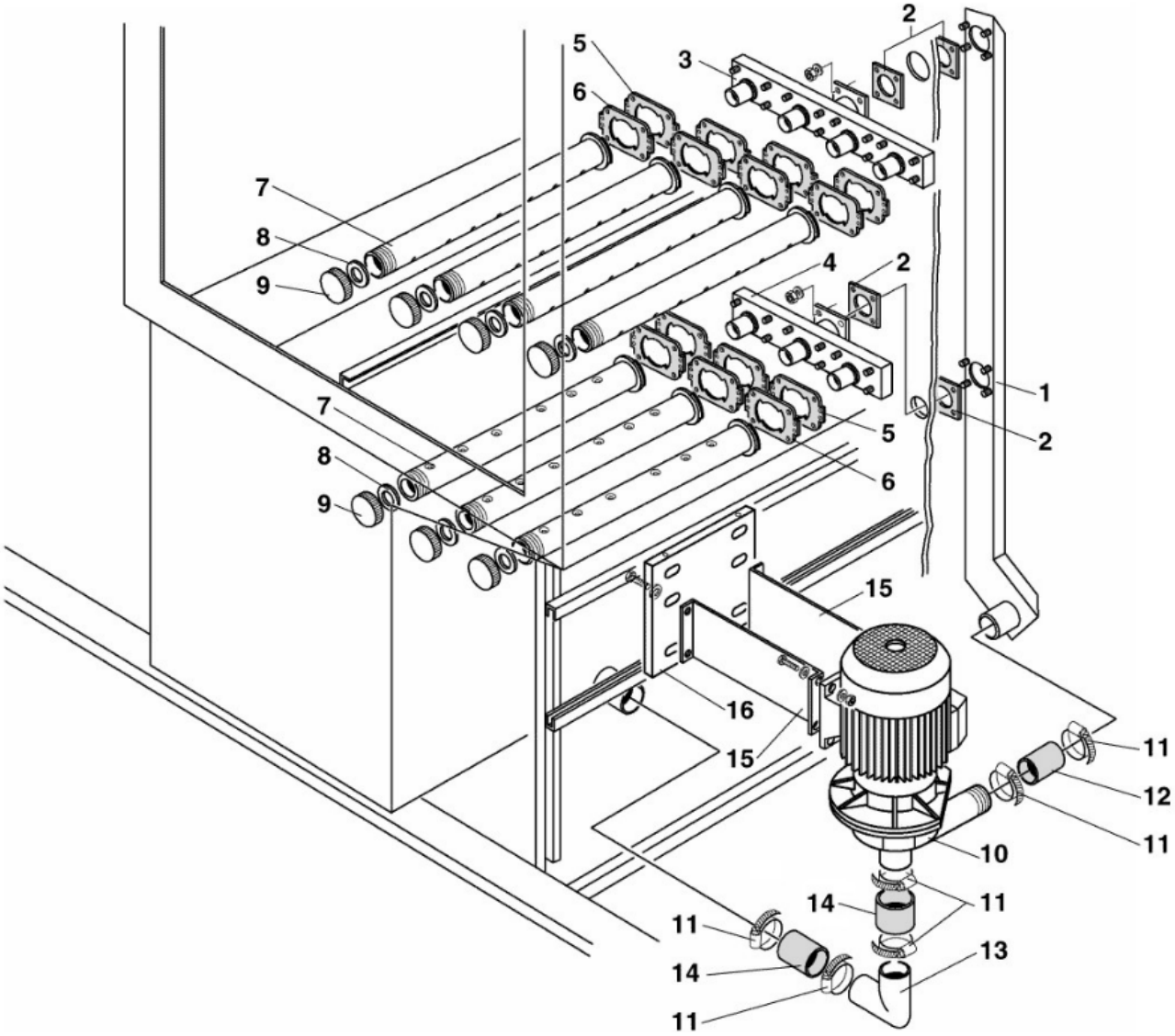
2
5
3
6
7
8
9
4
2
1
2
7
5
8
6
9
15
16
15
11
12
11
10
14
11
11
13
14
11

Code	Description	Validity Date
	WASHING PIPE	01/12/1999-
3151900	GASKET	01/12/1999-
30Z2650	UPPER WASHING PIPE	01/12/1999-
30Z2660	LOWER WASHING PIPE	01/12/1999-
36G9390	FLANGE	01/12/1999-
36G9400	FLANGE COUPLING	01/12/1999-
30Z2670	U/L WASHING PIPE	01/12/1999-
3151980	GASKET	01/12/1999-31/12/2001
3152780	GASKET	01/01/2002-
36Q0970	PLASTIC PLUG	01/12/1999-31/12/2001
36Q1930	PLUG INOX	01/01/2002-
32M4830	PUMP	01/12/1999-
3022220	CLAMP	01/12/1999-
33M1330	OUTLET ELBOW L=170 ØI50 ØE60	01/12/1999-
33Q4630	PIPE FITTING INOX	01/12/1999-31/12/2003
33M1290	RUBBER INTAKE PIPE FITTING	01/01/2004-
33M1450	ELBOW L=170 ØI60 ØE70	01/12/1999-
	SPACER	01/12/1999-
3022210	PLATE	01/12/1999-

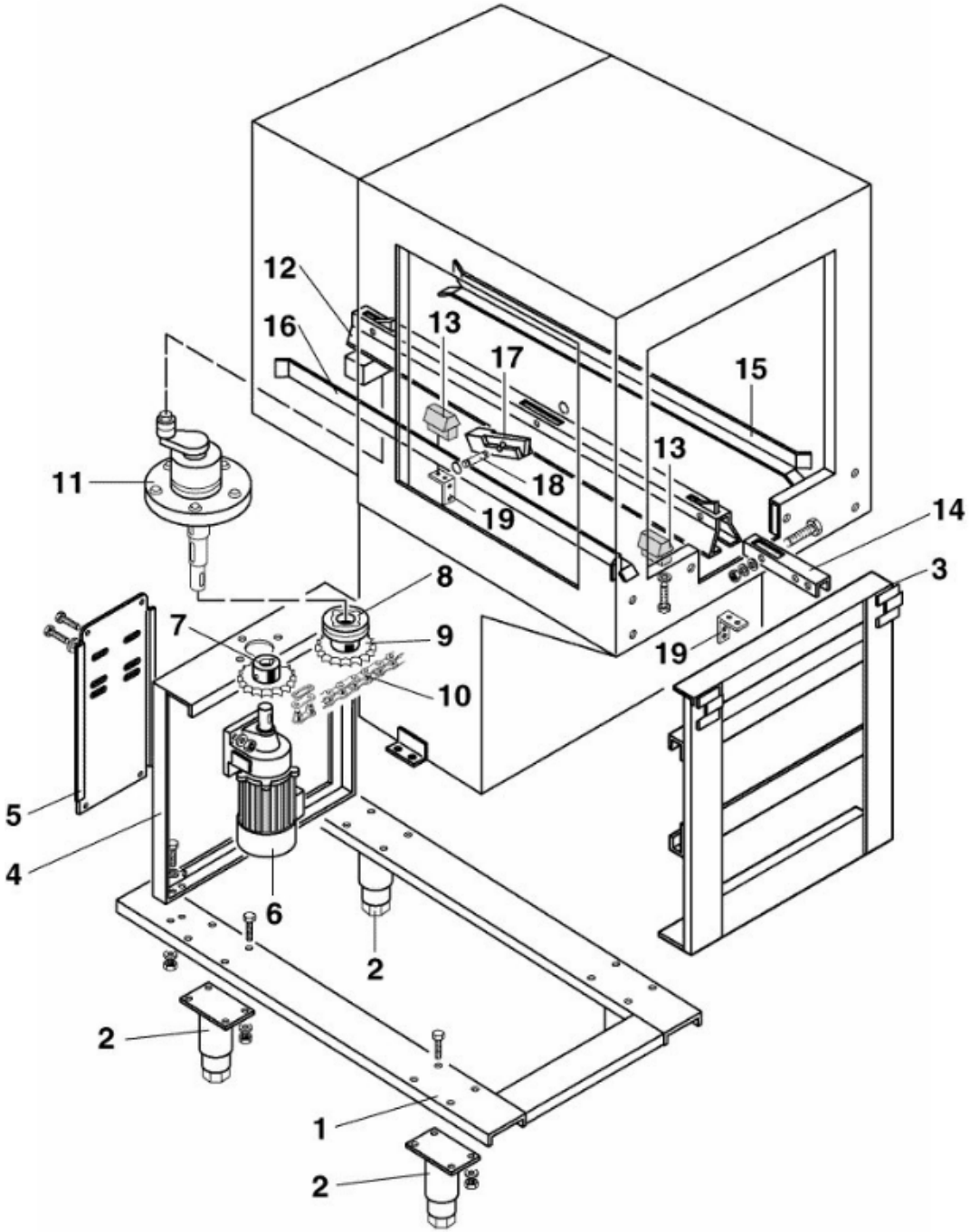
12
16
13
17
15
13
11
18
19
14
3
8
7
9
19
10
5
4
6
2
2
1
2

Code	Description	Validity Date
	FRAME	01/12/1999-
36Q0940	STAINLESS STEEL FOOT	01/12/1999-
	TANK SUPPORT FRAME	01/12/1999-
	SPEED REDUCER SUPPORT	01/12/1999-
	SPEED REDUCER PLATE	01/12/1999-
32M4850	SPEED REDUCER 380V	01/12/1999-
32M4880	SPEED REDUCER	01/12/1999-
3345050	SPEED REDUCER 415V	01/12/1999-
3245300	SPROCKET Z14	01/12/1999-
36G7700	SPROCKET	01/12/1999-
36G7710	SPROCKET	01/12/1999-
36G7540	TORQUE LIMITER	01/12/1999-
36G7690	GEAR	01/12/1999-
36G8330	"CHAIN P= 1/2"" (C304+CS243+CS37"	01/12/1999-
36G8880	"CHAIN P= 1/2"" (C165/C92)"	01/12/1999-
36G8890	CHAIN (C207)	01/12/1999-
36G7590	TOWING GEAR	01/12/1999-
3033820	PAWL BAR	01/12/1999-
30T3390	GUIDE SUPPORT	01/12/1999-
3033830	CONNECTION GUIDE	01/12/1999-
30T7240	RIGHT BASKET GUIDE	01/12/1999-
30T7250	LEFT BASKET GUIDE	01/12/1999-
36G7550	PAWL	01/12/1999-
33Q2830	PIN	01/12/1999-
	CENTRAL STANCHION	01/12/1999-

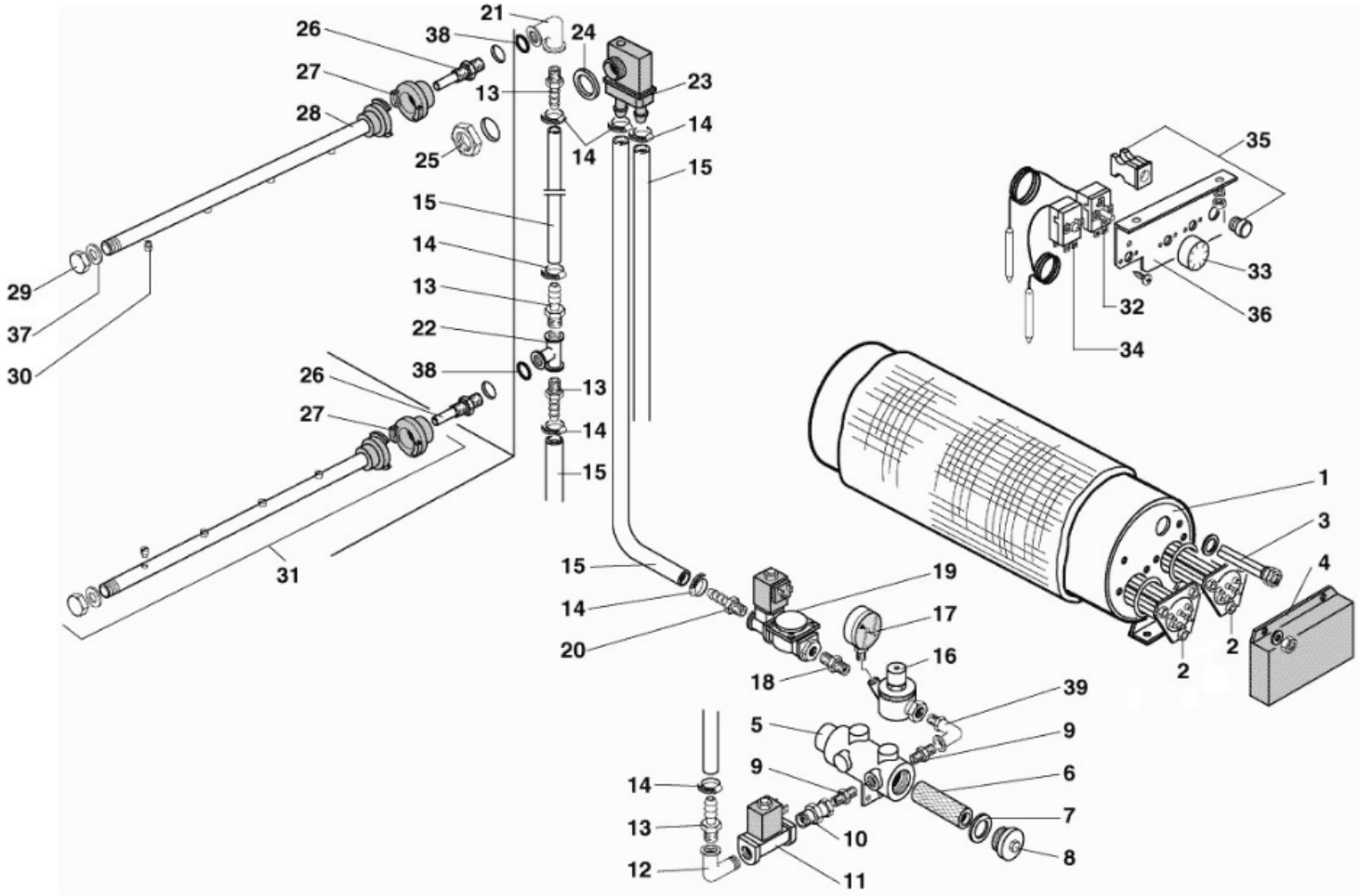
21
26
38
24
27
13
23
28
14
14
25
15
35
15
14
29
13
33
37
22
32
36
30
38
34
26
13
27
14
15
1
31
3
15
19
4
14
17
20
16
2
2
18
39
5
9
9
6
14
7
13
10
8
12
11

Code	Description	Validity Date
34A2150	BOILER	01/12/1999-
32G2150	BOILER HEATING ELEMENT 10KW	01/12/1999-
30Q1070	BULB HOLDER	01/12/1999-
30Q2610	HEATING COVER	01/12/1999-
30Q1490	FILTER	01/12/1999-
30Q1290	FILTER	01/12/1999-
3044690	GASKET	01/12/1999-
3044700	PLUG	01/12/1999-
3071310	"NIPPLE 1/2""""	01/12/1999-
3022550	PIPE UNION 1/2''	01/12/1999-
33D1060	"SOLENOID VALVE 1/2""""	01/12/1999-
3022560	PIPE FITTING 1/2''	01/12/1999-
33Q4770	PIPE FITTING 1/2"	01/12/1999-
3140230	12/20 PIPE CLAMP	01/12/1999-
33M1210	RUBBER PIPE	01/12/1999-
33D3220	"PRESSURE REDUCER 1/2""""	01/12/1999-
33D2090	PRESSURE GANGE 0-4BAR Ø50 - 1	01/12/1999-
3071290	"NIPPLE 3/4""-1/2""""	01/12/1999-
33D1050	"SOLENOID VALVE 3/4""""	01/12/1999-
3022540	PIPE FITTING 3/4"	01/12/1999-
33Q4790	"PIPE FITTING 1/2""""	01/12/1999-
33Q4780	PIPE FITTING 1/2"	01/12/1999-
33D2100	SAFETY VALVE	01/12/1999-31/12/2001
33D2330	NON-RETURN VALVE + NUT	01/01/2002-31/08/2007
33D2100	SAFETY VALVE	01/09/2007-
3152190	GASKET	01/12/1999-
32D1140	LOCK NUT	01/12/1999-
36G9860	GUIDE FOR ARM	01/12/1999-
3029420	QUICK COUPLER	01/12/1999-
3074610	UPPER/LOWER RINSE ARM	01/12/1999-
36Q1900	PLUG	01/12/1999-
33T2930	NOZZLE	01/12/1999-
30Z1120	UPPER RINSE ARM ASS.Y	01/12/1999-
32Z8840	THERMOSTAT 30-90C	01/12/1999-
36M2830	HANDLE	01/12/1999-
32Z8830	SAFETY THERMOSTAT	01/12/1999-
3106740	PUSH BUTTON	01/12/1999-
3106750	THERMOSTAT BRACKET	01/12/1999-
37Q4200	GASKET	01/12/1999-
3152670	GASKET	01/12/1999-
3071300	"PIPE UNION 1/2""""	01/12/1999-

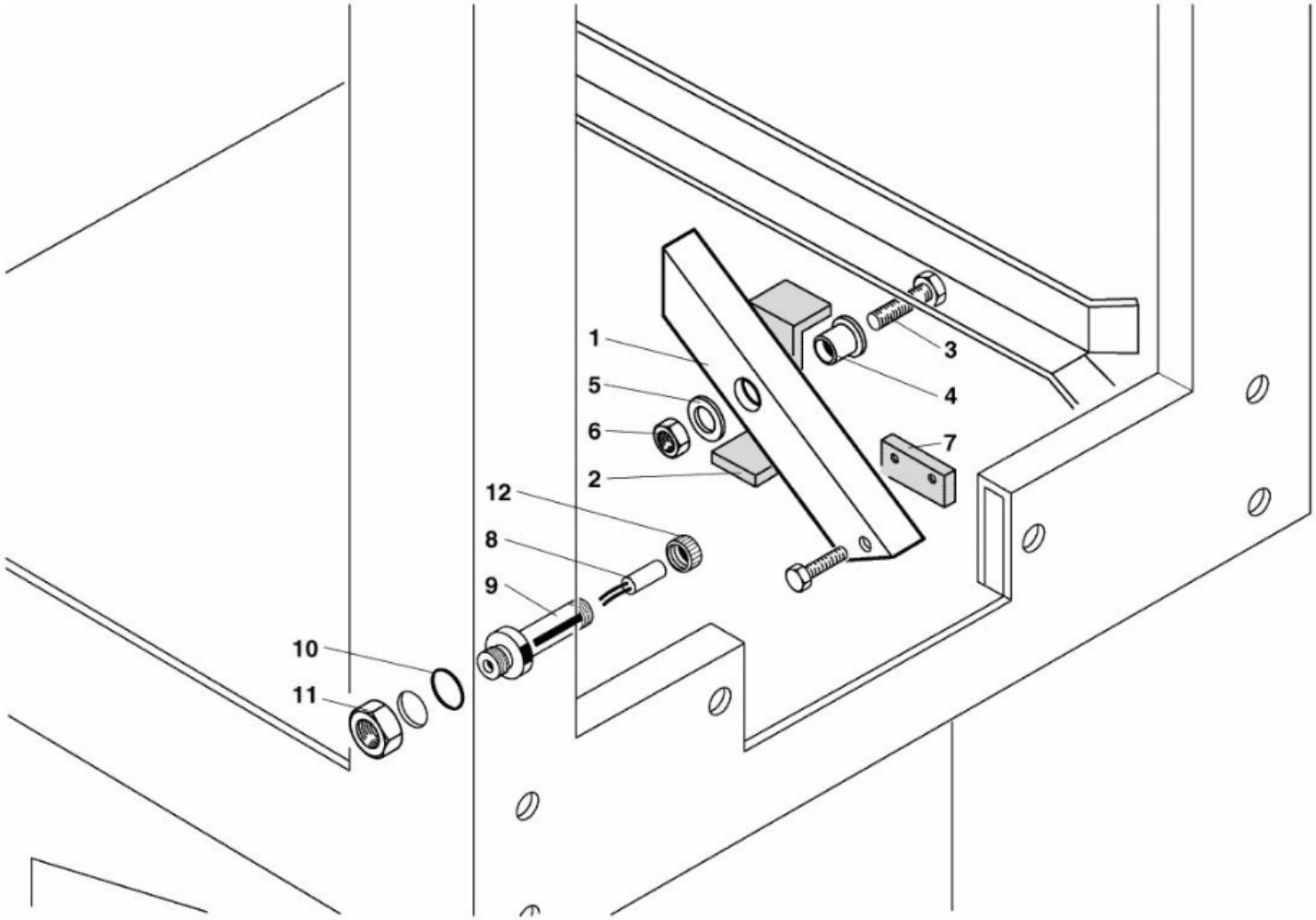
1
2
3
4
5
6
7
8
9
10
11
12

Code	Description	Validity Date
36H0780	ACTUATOR	01/12/1999-
35U2230	ECONOMISER BRACKET	01/12/1999-
31A9660	SCREW	01/12/1999-
36G9450	BEARING	01/12/1999-
3123670	WASHER	01/12/1999-
3110050	STEEL NUT M8X6.5	01/12/1999-
32W0870	MAGNET	01/12/1999-
32Z8650	MAGNETIC REED	01/12/1999-
35W5190	COVER MAGNET	01/12/1999-
3152170	O-RING	01/12/1999-
33Q2190	RING NUT	01/12/1999-
36Q1650	PLUG	01/12/1999-

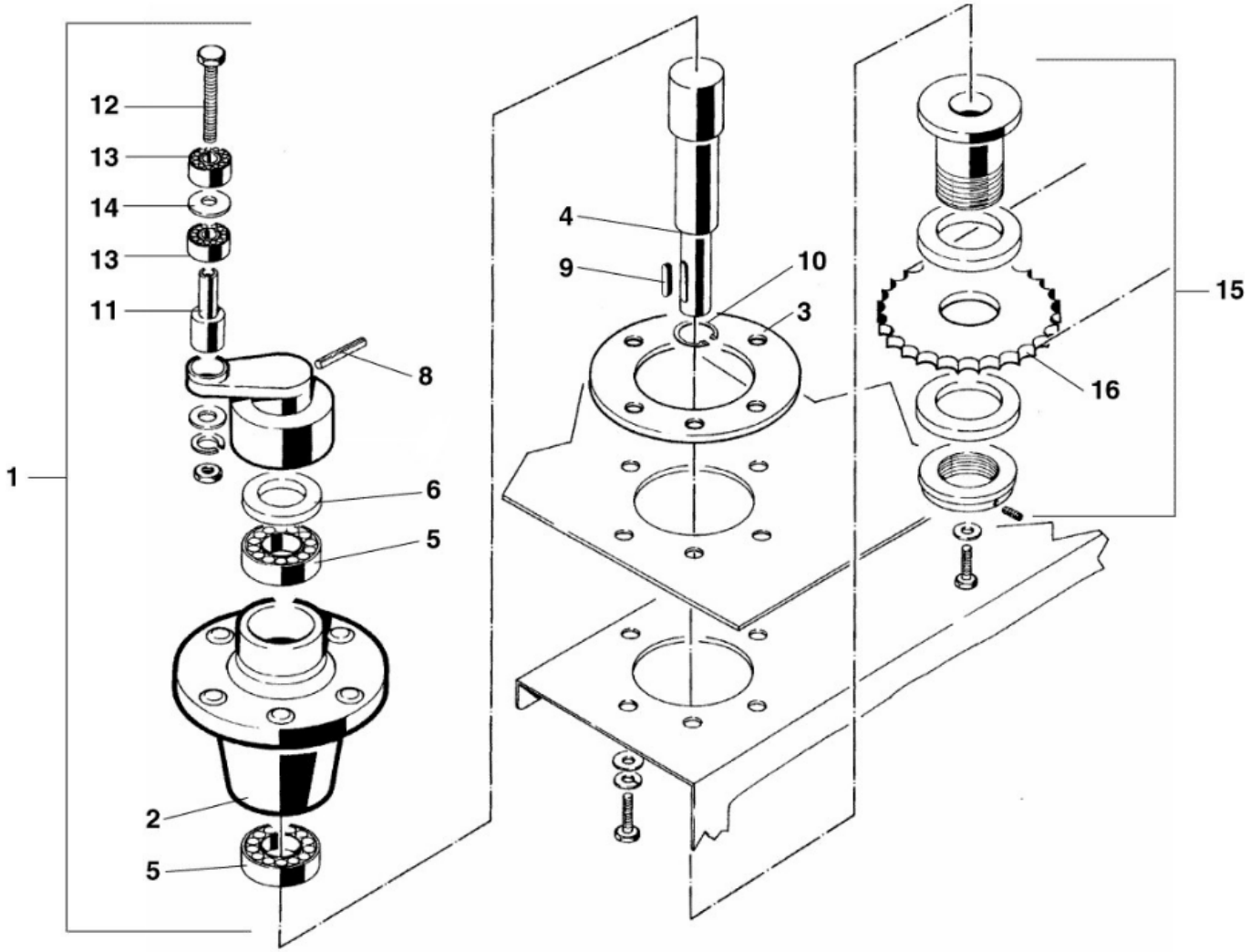
12
13
14
13
11
8
1
6
5
2
5
4
9
10
3
15
16

Code	Description	Validity Date
36H0780	ACTUATOR	01/12/1999-
35U2230	ECONOMISER BRACKET	01/12/1999-
31A9660	SCREW	01/12/1999-
36G9450	BEARING	01/12/1999-
3123670	WASHER	01/12/1999-
3110050	STEEL NUT M8X6.5	01/12/1999-
32W0870	MAGNET	01/12/1999-
32Z8650	MAGNETIC REED	01/12/1999-
35W5190	COVER MAGNET	01/12/1999-
3152170	O-RING	01/12/1999-
33Q2190	RING NUT	01/12/1999-
36Q1650	PLUG	01/12/1999-

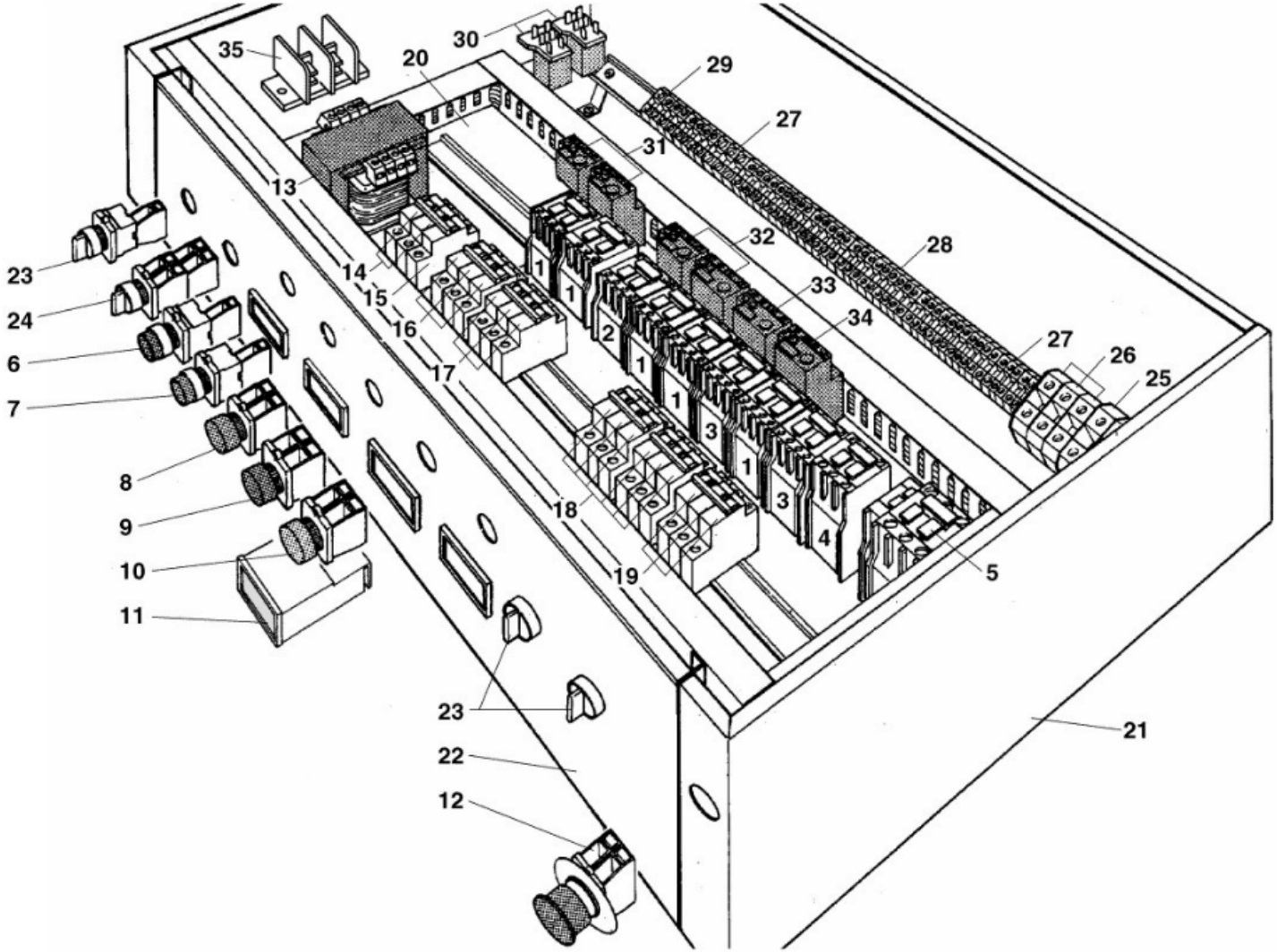
35
30
20
29
27
31
13
32
28
23
14
33
24
15
34
6
16
27
26
7
17
25
8
9
18
10
19
5
11
23
21
22
12

Code	Description	Validity Date
32Z8680	CONTACTOR	01/12/1999-
3004890	CONTACTOR	01/12/1999-
3059490	CONTACTOR	01/12/1999-
32V4980	CONTACTOR	01/12/1999-
32V5470	RELAY 32A	01/12/1999-
32W4000	STOP PUSH BUTTON	01/12/1999-
32W4010	START PUSH BUTTON	01/12/1999-
32W1720	GREEN LIGHT	01/12/1999-
32W1710	RED LIGHT	01/12/1999-
32W1700	YELLOW LIGHT	01/12/1999-
32Z8250	DIGITAL THERMOMETER	01/12/1999-
32W1750	MAIN STOP PUSH BUTTON	01/12/1999-
32Z8980	TRANSFORMER 350VA	01/12/1999-
32Z9020	SWITCH	01/12/1999-
32Z9000	MAIN SWITCH	01/12/1999-
32Z8580	MAIN SWITCH	01/12/1999-
32Z8660	MAIN SWITCH	01/12/1999-
32Z8590	MAIN SWITCH	01/12/1999-
3001790	SWITCH	01/12/1999-
	ELECTRIC COMP. SUPPORT	01/12/1999-
	CABINET	01/12/1999-
	CONTROL PANEL	01/12/1999-
32Z8670	SWITCH	01/12/1999-
32Z8470	SWITCH	01/12/1999-
3069840	TERMINAL BOARD	01/12/1999-
3002540	TERMINAL	01/12/1999-
32V4940	TERMINAL 10 mm	01/12/1999-
3246960	TERMINAL	01/12/1999-
	TERMINAL	01/12/1999-
32Z8640	RELAY	01/12/1999-
32Z8740	OVERLOAD RELAY 1,25÷2A	01/12/1999-14/04/2016
32Z8700	OVERLOAD RELAY	15/04/2016-
32Z8710	OVERLOAD RELAY	01/12/1999-
32Z8730	OVERLOAD RELAY 2,5-4A	01/12/1999-
32Z8780	OVERLOAD RELAY 4-6A	01/12/1999-
	TERMINAL	01/12/1999-

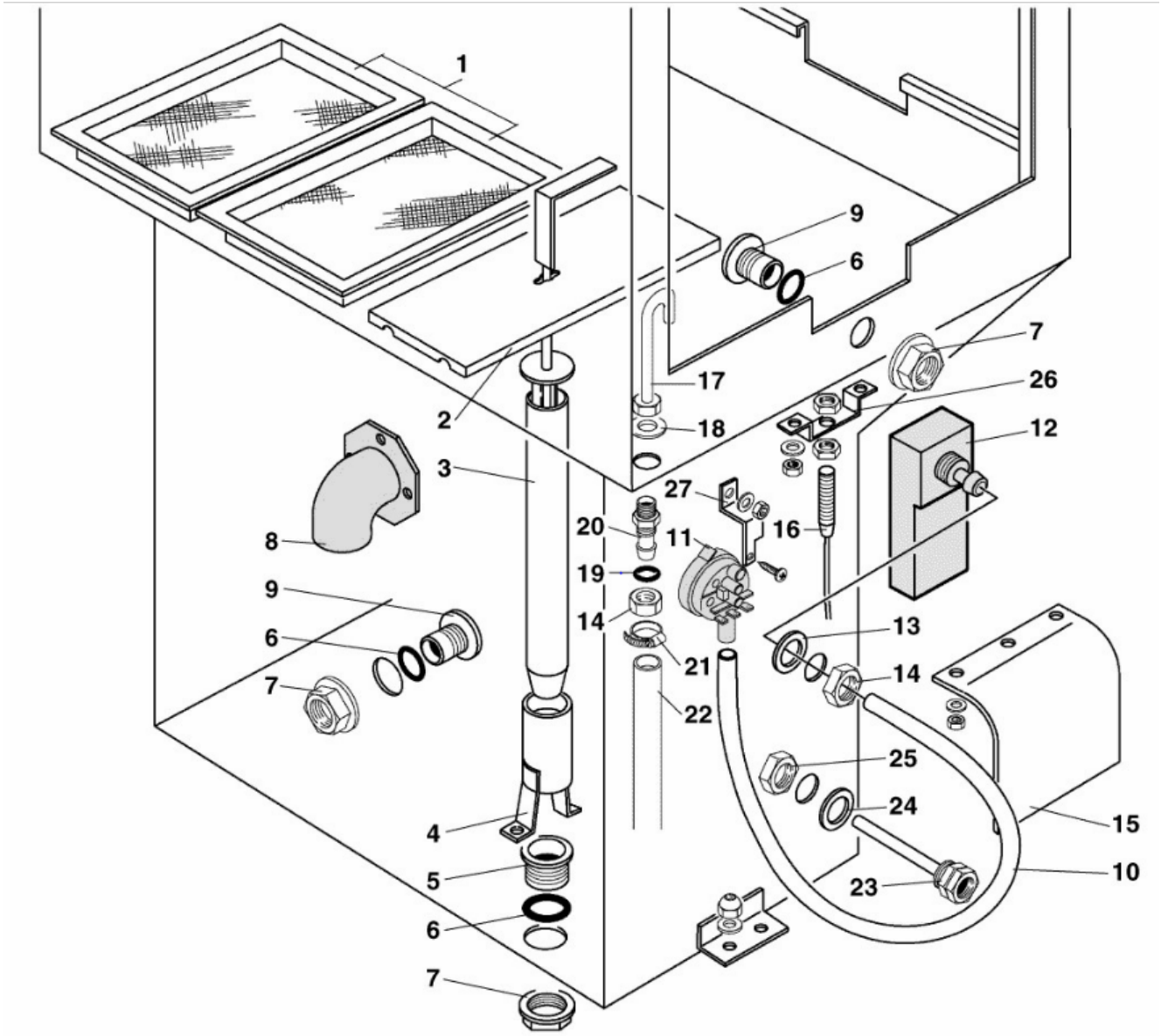
1
2
3
4
5
6
7
8
9
10
11
12
13
14
15
16
17
18
19
20
21
22
23
24
25
26
27

Code	Description	Validity Date
	''C''-PROFIL	01/12/1999-
	CROSS PIECE	01/12/1999-
33D2950	RODDED OVERFLOW	01/12/1999-31/05/2016
33D1550	OVERFLOW	01/06/2016-
30T2720	OVER FLOW GUIDE	01/12/1999-
33Q4740	"DRAIN CONNECTION 1""1/4"	01/12/1999-
3151930	O-RING	01/12/1999-
33Q2160	RING NUT	01/12/1999-
33Q4290	ONTAKE PIPE FITTING	01/12/1999-
33Q2290	"DRAIN CONNECTION 1""1/4"	01/12/1999-
131AA08	H0SE	01/12/1999-
32Z8870	PRESSURE-SWITCH 80/110	01/12/1999-
33D1390	AIR TRAP	01/12/1999-
3151890	GASKET	01/12/1999-
33Q2190	RING NUT	01/12/1999-
	RUBBER COVER	01/12/1999-
32Z8650	MAGNETIC REED	01/12/1999-
33Q2660	TANK LOADING PIPE	01/12/1999-
3061510	GASKET	01/12/1999-
3152170	O-RING	01/12/1999-
3026200	PIPE FITTING	01/12/1999-
3140230	12/20 PIPE CLAMP	01/12/1999-
33M1210	RUBBER PIPE	01/12/1999-
30Q1420	SEATING BULB	01/12/1999-
37Q2840	GASKET	01/12/1999-
3201840	LOCK NUT 1/2"	01/12/1999-
35Q9260	REED BRACKET	01/12/1999-
	PRESSURE SWITCH SUPP.	01/12/1999-

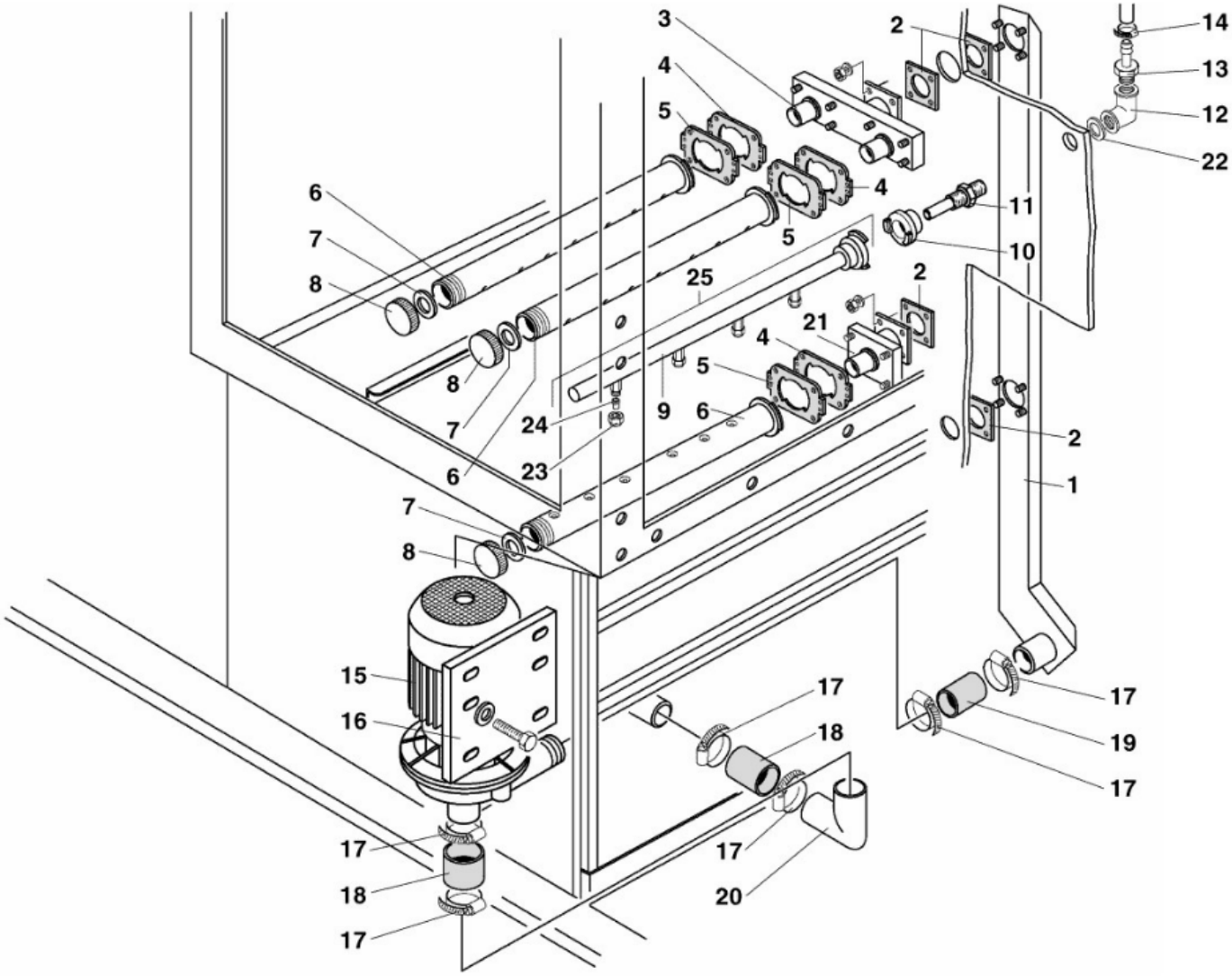

3
2
14
13
4
12
5
22
4
6
11
7
5
10
8
25
2
21
4
8
5
9
6
7
24
2
6
23
1
7
8
15
17
17
16
18
19
17
17
17
18
20
17

Code	Description	Validity Date
3028100	PREWASHING PIPE	01/12/1999-
3151900	GASKET	01/12/1999-
30Z2630	UPPER PREWASHING PIPE	01/12/1999-
36G9390	FLANGE	01/12/1999-
36G9400	FLANGE COUPLING	01/12/1999-
30Z2670	U/L WASHING PIPE	01/12/1999-
3151980	GASKET	01/12/1999-31/12/2001
3152780	GASKET	01/01/2002-
36Q0970	PLASTIC PLUG	01/12/1999-31/12/2001
36Q1930	PLUG INOX	01/01/2002-
30Z3370	DOUBLE RINSE JET	01/12/1999-
3029420	QUICK COUPLER	01/12/1999-
36G9860	GUIDE FOR ARM	01/12/1999-
33Q4790	"PIPE FITTING 1/2""""	01/12/1999-
3026200	PIPE FITTING	01/12/1999-
3140230	12/20 PIPE CLAMP	01/12/1999-
32M4820	PUMP	01/12/1999-
3022210	PLATE	01/12/1999-
3022220	CLAMP	01/12/1999-
33M1470	RUBBER PIPE	01/12/1999-
33M1330	OUTLET ELBOW L=170 ØI50 ØE60	01/12/1999-
33Q4630	PIPE FITTING INOX	01/12/1999-31/12/2003
33M1290	RUBBER INTAKE PIPE FITTING	01/01/2004-
30Z2640	LOWER PREWASHING PIPE	01/12/1999-
3152670	GASKET	01/12/1999-
33T3200	LOCK NUT 3/8"	01/12/1999-
	RINSE JET	01/12/1999-
3023380	WASHING ARM	01/12/1999-

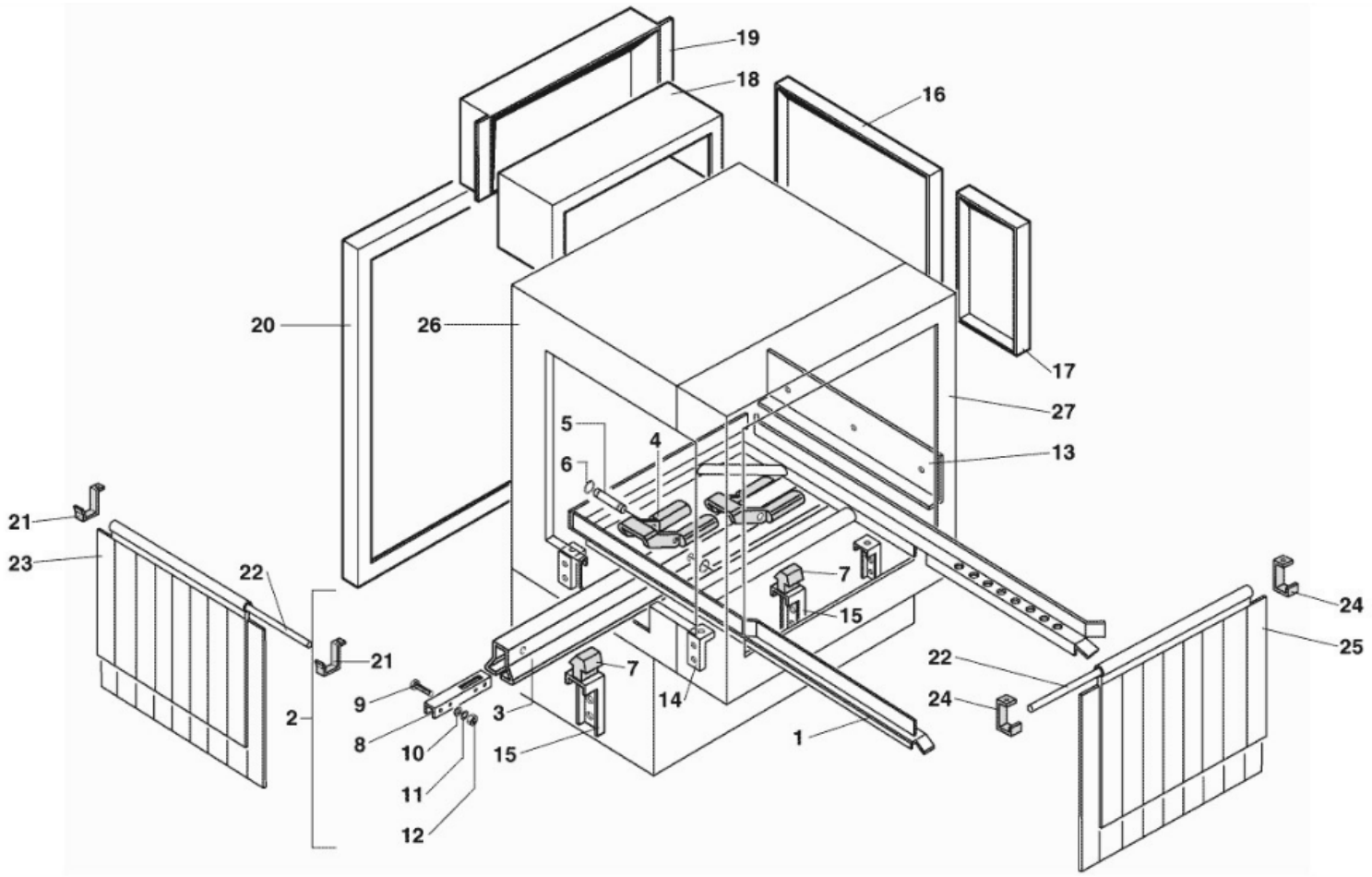
19
18
16
20
26
17
27
5
4
13
6
21
23
22
7
15
24
25
21
7
22
9
14
24
2
3
8
10
15
1
11
12

Code	Description	Validity Date
	BASKET GUIDE	01/12/1999-
	COMPLETE PAWL BAR	01/12/1999-
	PAWL BAR	01/12/1999-
36G7560	PAWL	01/12/1999-
36G9850	PIN L=62	01/12/1999-
3FL0314	SEEGER	01/12/1999-
30T3390	GUIDE SUPPORT	01/12/1999-
3033830	CONNECTION GUIDE	01/12/1999-
31A0300	SCREW M4 X 40	01/12/1999-
3120100	WASHER	01/12/1999-
	TAB WASHER	01/12/1999-
	NUT	01/12/1999-
	HOOD STRENGTHENING	01/12/1999-
	FRICTION PAD	01/12/1999-
	FRICTION PAD	01/12/1999-
	SIDE PANEL HOOD	01/12/1999-
	SIDE PANEL SPRAY-GARD H	01/12/1999-
	UPPER SIDE PANEL HOOD	01/12/1999-
	BACK UPPER SIDE PANEL H	01/12/1999-
	BACK LOWER SIDE PANEL H	01/12/1999-
3037880	BRACKET CURTAIN	01/12/1999-
36G7580	SHAFT	01/12/1999-
36Z0720	SPLASH GUARD CURTAIN 640XH=410	01/12/1999-
3027270	BRACKET CURTAIN	01/12/1999-
36Z0730	SPLASH GUARD CURTAIN 640XH=500	01/12/1999-
	HOOD	01/12/1999-
	HOOD	01/12/1999-