IMPORTANT FOR FUTURE REFERENCE

Please complete this information and retain this manual for the life of the equipment:

Model #: _____

Serial #: _____

Date Purchased: _____

ENGLISH

Exploded Parts Manual

SG14, SG14T, SG18, SG14R, SGC, SG18F, SGM1824, SGM24, SGM34 Gas Fryer Models

Built after 11/1999

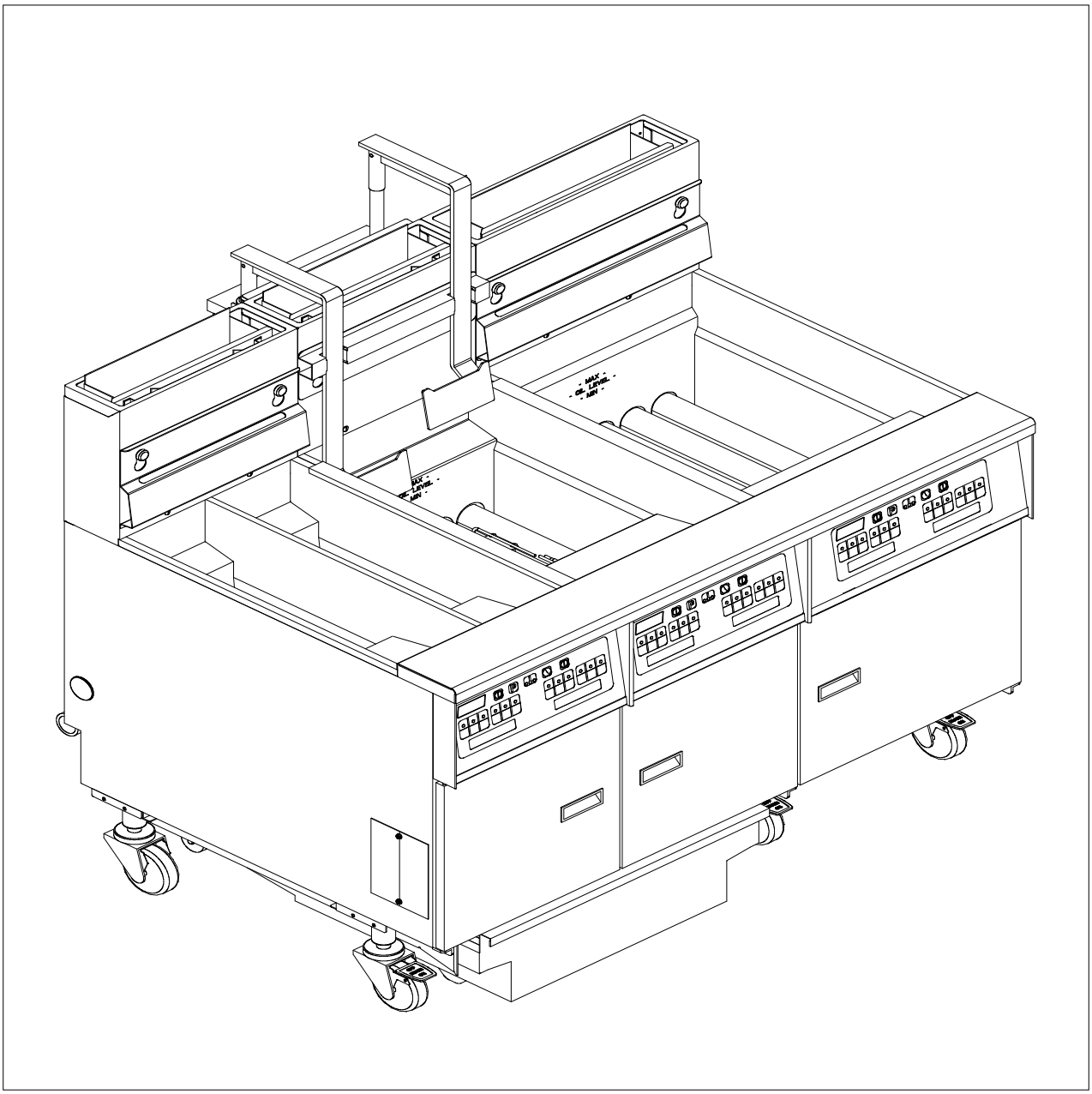

L20-221 Rev 4 (06/06)

***Post** in a prominent location the instructions to be followed in the event that an operator smells gas. Obtain this information from your local gas supplier.*

WARNING

DO NOT store or use gasoline or other flammable vapors and liquids in the vicinity of this or any other appliance.

WARNING

Improper installation, alteration, service or maintenance can cause property damage, injury or death. Read the installation, operating and maintenance instructions thoroughly before installing or servicing this appliance.

WARNING

Installation, maintenance and repairs should be performed by a Pitco Authorized Service and Parts (ASAP) company technician or other qualified personnel. Installation, maintenance or repairs by unauthorized or unqualified personnel will void the warranty.

WARNING

Installation and all connections must be made according to national and local regulations and codes in force.

WARNING

During the warranty period if a customer elects to use a non-original part or modifies an original part purchased from Pitco and/or its Authorized Service and Parts (ASAP) companies, this warranty will be void. In addition, Pitco and its affiliates will not be liable for any claims, damages or expenses incurred by the customer which arises directly or indirectly, in whole or in part, due to the installation of any modified part and/or received from an unauthorized service center.

WARNING

This appliance, when installed, must be electrically grounded in accordance with local codes, or in the absence of local codes, with the National Electrical Code, ANSI/NFPA 70, or the Canadian Electrical Code, CSA C22.2, as applicable.

WARNING

Adequate means must be provided to LIMIT the movement or this appliance without depending on the gas or electrical cord connection. Single appliances equipped with legs must be stabilized by installing anchor straps. All appliances equipped with casters must be stabilized by installing restraining chains.

WARNING

An appliance equipped with casters and a flexible gas line must be connected to the gas supply with a quick disconnect device. This quick disconnect must comply with ANSI Z24.41.

WARNING

DO NOT alter or remove structural material on the appliance to accommodate placement under a ventilation hood.

WARNING

This appliance is intended for professional use only and should be operated by fully trained and qualified personnel.

WARNING

If the appliance is equipped with a power cord and it is damaged, it must be replaced by a Pitco Authorized Service and Parts (ASAP) company technician, or a similarly qualified person in order to avoid a hazard.

WARNING

The power supply must be disconnected before servicing, maintaining or cleaning this appliance.

WARNING

The appliance is NOT jet stream approved. DO NOT clean the appliance with a water jet.

WARNING

DO NOT attempt to move this appliance or transfer hot liquids from one container to another when the unit is at operating temperature or filled with hot liquids. Serious personal injury could result if skin comes in contact with the hot surfaces or liquids.

WARNING

DO NOT sit or stand on this appliance. The appliance's front panel, tank, splash back, tank cover, workshelf, drain board is not a step. Serious injury could result from slipping, falling or contact with hot liquids.

WARNING

NEVER use the appliance as a step for cleaning or accessing the ventilation hood. Serious injury could result from slips, trips or from contacting hot liquids.

WARNING

The oil/shortening level should NOT fall below the minimum indicated level line at any time. The use of old shortening can be dangerous as it will have a reduced flash point and be more prone to surge boiling.

WARNING

The particles, crumbs and cracklings from the crumb tray/catch (if supplied) in a filtering system must be emptied into a fireproof container at the end of the frying operation each day. Some food particles can spontaneously combust into flames if left soaking in certain oil/shortening materials.

WARNING

Completely shut the appliance down when shortening/oil is being drained from the appliance. This will prevent the appliance from heating up during the draining and filling process. Serious injury can occur.

WARNING

This appliance is intended for indoor use only.

WARNING

DO NOT operate appliance unless all panels and access covers are attached correctly.

WARNING

It is recommended that this appliance be inspected by a qualified service technician for proper performance and operation on a yearly basis.

WARNING

There is an open flame inside this appliance. The unit may get hot enough to set nearby materials on fire. Keep the area around the appliance free from combustibles.

WARNING

DO NOT supply the appliance with a gas that is not indicated on the data plate. If you need to convert the appliance to another type of fuel, contact your dealer.

WARNING

DO NOT use an open flame to check for gas leaks!

WARNING

If gas flow to appliance is interrupted, or pilots extinguish, wait 5 minutes before attempting to relight the pilot to allow any residual gas in appliance to dissipate.

WARNING

Ensure that the appliance can get enough air to keep the flame burning correctly. If the flame is starved for air, it can give off a dangerous carbon monoxide gas. Carbon monoxide is a clear odorless gas that can cause suffocation.

This Page Left Intentionally Blank

TABLE OF CONTENTS

FRYER EXPLODED VIEWS 6
- Fryer Exploded View 1 Parts List 6
- Fryer Exploded View 1 7
- Fryer Exploded View 2 Parts List 8
- Fryer Exploded View 2 9

A) TANK & FLUE 10
- Tank & Flue Drawing A Parts List 10
- Tank & Flue Drawing A 11

B) BURNER ASSEMBLY 12
- Burner Assembly Drawing B Parts List B(A) 12
- Burner Assembly Drawing B 13
- Burner Assembly Drawing B Parts List B(B) 14

C) GAS TRAIN 15
- Gas Train Drawing C1 Parts List 16
- Gas Train Drawing C1 17
- Gas Train Drawing C2 Parts List 18
- Gas Train Drawing C2 19

D) GAS CONVERSION KITS 20
- Gas Conversion Kits Quick Reference 20
- Gas Conversion Kits Simple Instructions Drawing D 21
- Gas Conversion Kits Slot Face Burners Parts List D1 22
- Gas Conversion Kits Wire Face Burners Parts List D2 23
- Gas Conversion Kits SGC Parts List D3 24
- Gas Conversion Kits SGM Parts List D4 25
- Gas Conversion Kits Slot Face Burners (CE) Parts List D5 26
- Gas Conversion Kits Wire Face Burners (CE and Australia) Parts List D6 27
- Gas Conversion Kits SGC (CE) Parts List D7 28
- Gas Conversion Kits SGM (CE) Parts List D8 29

E) FRYER CABINET 30
- Modular Cabinet Drawing E1 Parts List E1(A) 30
- Modular Cabinet Drawing E1 31
- Modular Cabinet Drawing E1 Parts List E1(B) 32
- Modular Cabinet Drawing E1 Parts List E1(C) 33
- Standard Cabinet Drawing E2 Parts List 34
- Standard Cabinet Drawing E2 35

F) ENTRANCE BOX 36
- Entrance Box Drawing F Parts List 36
- Entrance Box Drawing F 37

G) CONTROL BOX 38
- Control Box Pre 8/00 Drawing G1 Parts List 38
- Control Box Pre 8/00 Drawing G1 39
- Control Box Post 8/00 Drawing G2 Parts List 40
- Control Box Post 8/00 Drawing G2 41

H) SMALL ASSEMBLIES 42
- Small Assemblies Drawing H Parts List 42
- Small Assemblies Drawing H 43

I) DRAIN LINE 44
- Drain Line Drawing I Parts List 44
- Drain Line Drawing I 45

J) FILTER PAN 46
- Filter Pan Drawing J Parts List 46
- Filter Pan Drawing J 47

K) WASTE OIL MANAGEMENT 48
- Waste Oil Management Drawing K Parts List 48
- Waste Oil Management Drawing K 49

L) PUMP ASSEMBLY 50
Pump Assembly Pre 3/04 Drawing L1 Parts List 50
Pump Assembly Pre 3/04 Drawing L1 51
Pump Assembly Post 3/04 Drawing L2 Parts List 52
Pump Assembly Post 3/04 Drawing L2 53
Pump Assembly SFSG Drawing L3 Parts List 54
Pump Assembly SFSG Drawing L3 55

M) PUMP BOX 56
Pump Box Drawing M Parts List 56
Pump Box Drawing M 57

N) RETURN LINE 58
Return Line Drawing N Parts List 58
Return Line Drawing N 59

O) FLUSH HOSE ASSEMBLY 60
Flush Hose Assembly Drawing O Parts List 60
Flush Hose Assembly Drawing O 61

P) FLUSH HOSE (HOSE) ASSEMBLY 62
Flush Hose (Hose) Assembly Drawing P Parts List 62
Flush Hose (Hose) Assembly Drawing P 63

Q) BASKET LIFT 64
Basket Lift Drawing Q Parts List 64
Basket Lift Drawing Q 65

R) BASKET LIFT COMPONENTS 66
Basket Lift Components Drawing R Parts List 66
Basket Lift Components Drawing R 67

S) ACCESSORIES 68
Accessories Drawing S Parts List S(A) 68
Accessories Drawing S 69
Accessories Drawing S Parts List S(B) 70

T) BNB 72
BNB Drawing T Parts List 72
BNB Drawing T 73

U) DROP INS 74
Drop Ins Drawing U Parts List 74
Drop Ins Drawing U 75

FRYER EXPLODED VIEWS

Fryer Exploded View 1 Parts List

ITEM #	PART #	PART DESCRIPTION
1	B6665001-C	FILTER PAN COVER ASSEMBLY SFD
	B6665003-C	FILTER PAN COVER ASSEMBLY SFSG18
	B6665004-C	FILTER PAN COVER ASSEMBLY SFSG14*
	B6665007-C	FILTER PAN COVER ASSEMBLY SGM1824
	B6665008-C	FILTER PAN COVER ASSEMBLY SGM24
	B6665009-C	FILTER PAN COVER ASSEMBLY SGM34
2	B8033302-C	REAR-TEE MANIFOLD WELDMENT SG14/SG18
	B8033304-C	REAR-TEE MANIFOLD WELDMENT SGM1824/SGM24
	B8033305-C	REAR-TEE MANIFOLD WELDMENT SGM24-2
	B8033306-C	REAR-TEE MANIFOLD WELDMENT SGM1824/SGM34
	B8033307-C	REAR-TEE MANIFOLD WELDMENT SGM24/SGM34
	B8033308-C	REAR-TEE MANIFOLD WELDMENT SGM34-2
	B8033802-C	REAR-TEE MANIFOLD WELDMENT SG14-2/SG18
	B8033803-C	REAR-TEE MANIFOLD WELDMENT SG14/SG18/SG14,SG18/SG14/SG18
	B8033804-C	REAR-TEE MANIFOLD WELDMENT SG14/SG18/SG18
	B8034102-C	REAR-TEE MANIFOLD WELDMENT SG14-3/SG18
	B8034103-C	REAR-TEE MANIFOLD WELDMENT SG14-2/SG18/SG14
	B8034104-C	REAR-TEE MANIFOLD WELDMENT SG14-2/SG18-2
	B8034105-C	REAR-TEE MANIFOLD WELDMENT SG18/SG14/SG18/SG14
	B8034106-C	REAR-TEE MANIFOLD WELDMENT SG14/SG18-2/SG14
	B8034107-C	REAR-TEE MANIFOLD WELDMENT SG18/SG14-2/SG18
	B8034108-C	REAR-TEE MANIFOLD WELDMENT SG18-3/SG14
	B8034109-C	REAR-TEE MANIFOLD WELDMENT SG18-2/SG14/SG18
	B8034111-C	REAR-TEE MANIFOLD WELDMENT SG14-2/SGBNB14/SG14-2 (CRACKER BARREL)
	B8034112-C	REAR-TEE MANIFOLD WELDMENT SGM1824-3/SGM34
	B8039201	REAR-TEE MANIFOLD WELDMENT SG14-2
	B8039202	REAR-TEE MANIFOLD WELDMENT SG18-2
	B8039203	REAR-TEE MANIFOLD WELDMENT SG14-3
	B8039204	REAR-TEE MANIFOLD WELDMENT SG18-3
	B8039205	REAR-TEE MANIFOLD WELDMENT SG14-4
	B8039206	REAR-TEE MANIFOLD WELDMENT SG18-4
3	60133203	GAS RESTRICTOR FITTING UNREGULATED 3/4 M/F NPT 4.83mm SG14
	60133204	GAS RESTRICTOR FITTING UNREGULATED 3/4 M/F NPT 5.18mm SG14R
	60133205	GAS RESTRICTOR FITTING UNREGULATED 3/4 M/F NPT 5.61mm SG18
4	P0007300	SCREW 8-32 X 1/4 INDENTED HEX HEAD ZN
5	P6071516	CHROME HANDLE 3"
6	P7036206	BUSHING REDUCER 1-1/4 MNPT X 1 FNPT HEX BLACK IRON (366,000 BTU MAX)
7	P7036904	UNION 3/4 NPT BLACK IRON
8	P7037400	PIPE NIPPLE CLOSE 1 NPT SCHED-40 BLACK STEEL CE
	P7037450	PIPE NIPPLE CLOSE 1-1/4 NPT SCHED-40 BLACK STEEL CE
9	PP10023	SCREW 10-24 X 3/8 SELF TAPPING
10	PP10479	PLUG 1-1/4 NPT HEX HEAD BLACK IRON
11	PP10964	GAS SUPPLY ADAPTOR FITTING 1-1/4 BSPT X 1-1/4 FNPT CE
	PP10966	GAS SUPPLY ADAPTOR FITTING 1 BSPT X 1 FNPT CE
	PP11292	GAS SUPPLY ADAPTOR FITTING 3/4 BSPT X 3/4 FNPT CE

Fryer Exploded View 1

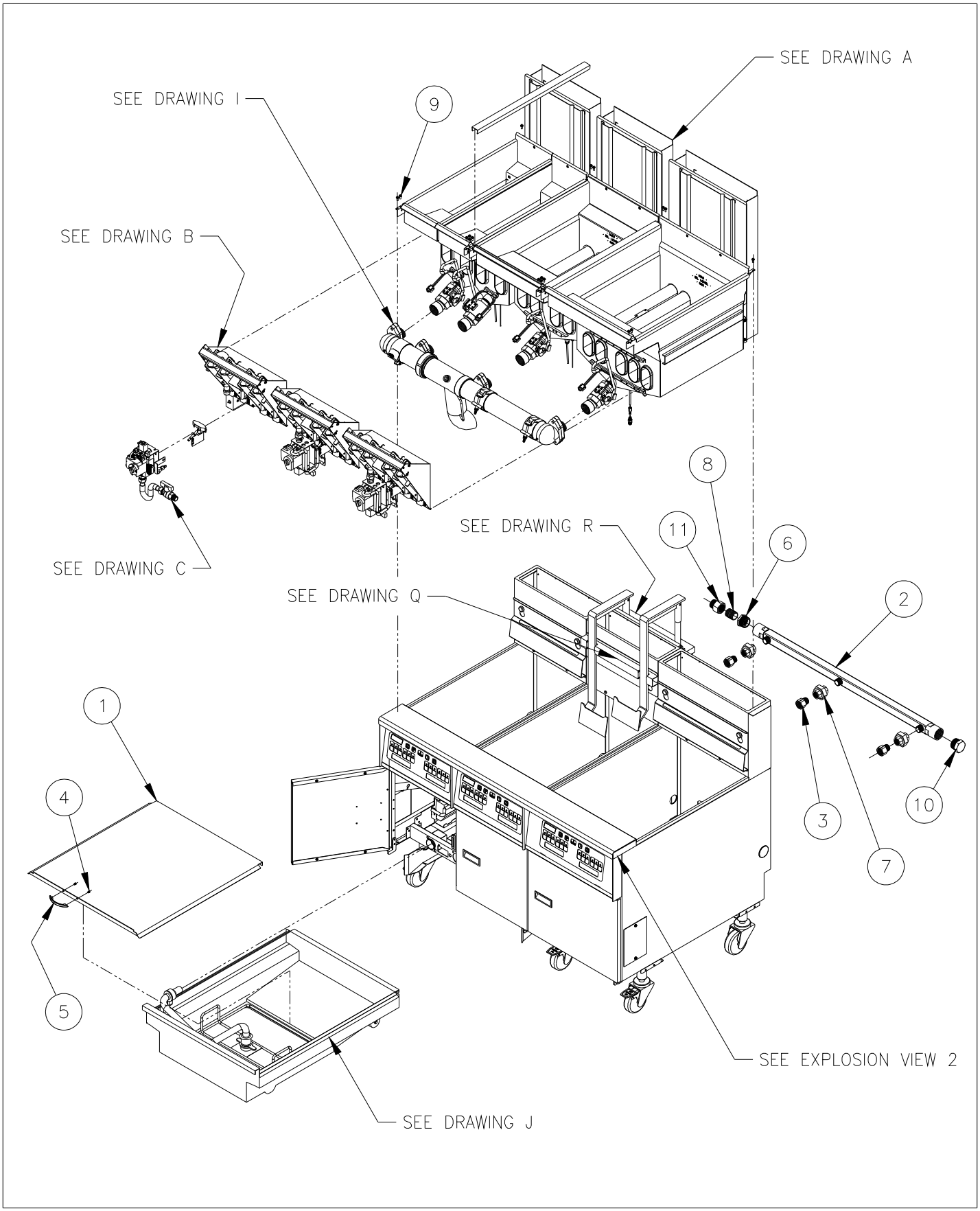

Fryer Exploded View 2 Parts List

ITEM #	PART #	PART DESCRIPTION
1	B6676001	FILTER PICKUP BLOCK WELDMENT (NOT USED PRIOR TO 01/13/04)
2	A1844001-C	CABINET CABLE RETAINER
3	A3667904-C	FRONT PANEL BOTTOM RAIL SG18,SG18F
	A3667906-C	FRONT PANEL BOTTOM RAIL SG14,SG14R,SG14T
	A3676302-C	FRONT PANEL BOTTOM RAIL SGM1824
	A3676304-C	FRONT PANEL BOTTOM RAIL SGM24
	A3676306-C	FRONT PANEL BOTTOM RAIL SGM34
4	A7027602	FILTER PICKUP BLOCK (PRIOR TO 01/13/04)
5	A7027902	FILTER PUMP PLATE MOUNTING ROD
6	A7028401-C	FILTER PUMP PLATE MOUNTING ROD HOLDER
7	60068301	O-RING VITON NEWMAN #318-3107 (NOT USED PRIOR TO 01/13/04)
8	60128403	POWER CORD JUMPER 3-WIRE 16A 34" IEC-320 MALE/FEMALE
9	60128501	POWER CORD 3-WIRE 16A 96" IEC-320 FEMALE, NEMA 5-15P MALE
10	60130501	STRAIN RELIEF LAY-IN
11	P7037360	PIPE NIPPLE 3/4 NPT SCHED-40 X 4-1/2 LG BLACK IRON (PRIOR TO 01/13/04)
12	PP10023	SCREW 10-24 X 3/8 SELF TAPPING
13	60129301	SCREW 10-24 X 5/8 HEX HEAD MACHINE WITH PATCH-LOC ZN
14	PP11104	O-RING VITON NEWMAN #120-3107 (PRIOR TO 01/13/04)

Fryer Exploded View 2

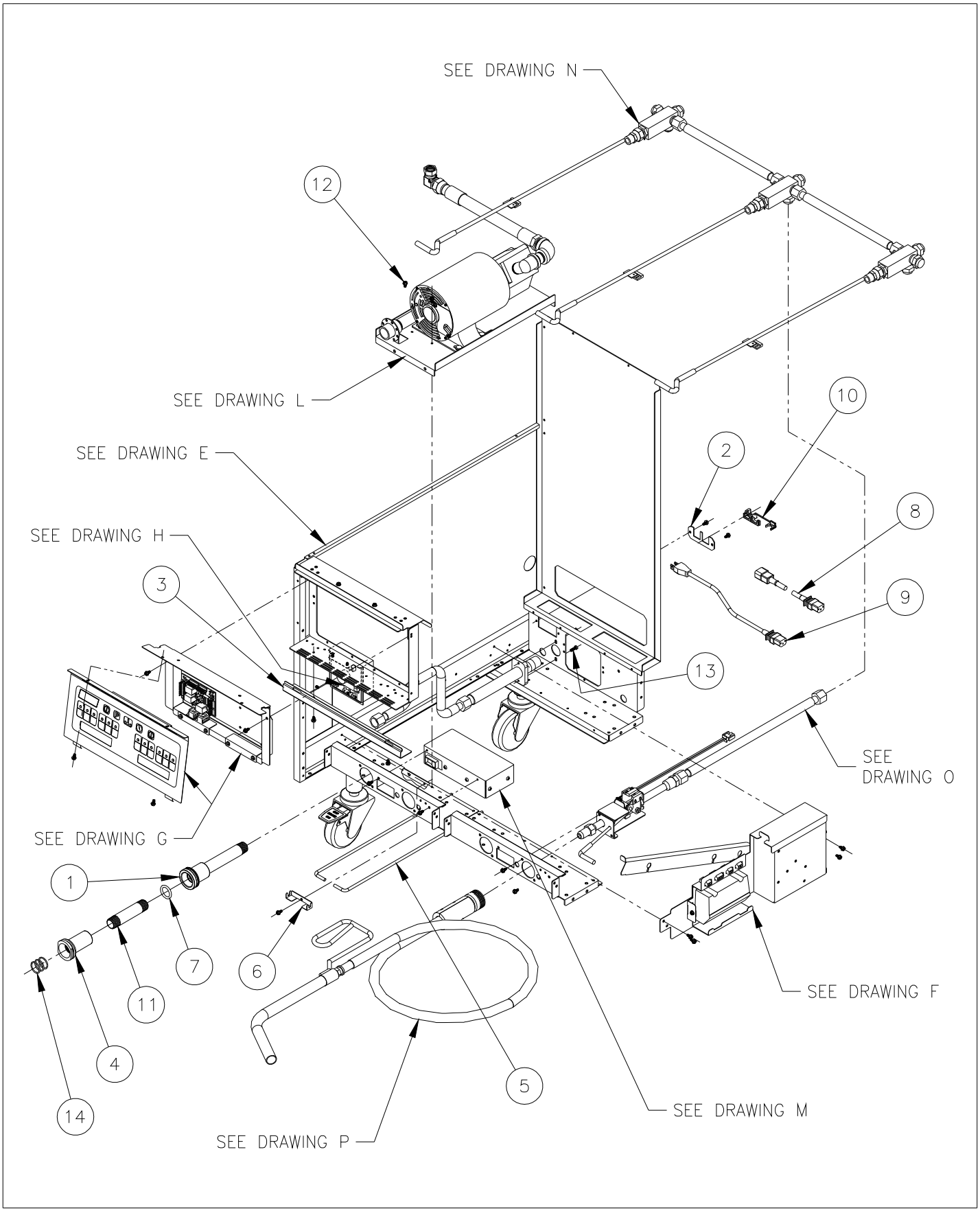

A) TANK & FLUE

Tank & Flue Drawing A Parts List

ITEM #	PART #	PART DESCRIPTION
1	B3321501-C	TANK WELDMENT STANDARD SST SG14
	B3321601-C	TANK WELDMENT STANDARD SST SG14R
	B3321701-C	TANK WELDMENT STANDARD SST SG14T
	B3321801-C	TANK WELDMENT STANDARD SST SG18
	B3322501-C	TANK WELDMENT MODULAR SST SG14
	B3322601-C	TANK WELDMENT MODULAR SST SG14R
	B3322701-C	TANK WELDMENT MODULAR SST SG14T
	B3322801-C	TANK WELDMENT MODULAR SST SG18
	B3322901-C	TANK WELDMENT STANDARD CRS SG14
	B3323001-C	TANK WELDMENT STANDARD CRS SG14R
	B3323101-C	TANK WELDMENT STANDARD CRS SG18
	B3323801-C	TANK WELDMENT STANDARD CRS SG14T
	B3324701-C	TANK WELDMENT SGC
	B3324801-C	TANK WELDMENT SG18F
	B3328001-C	TANK WELDMENT SGM1824
	B3328101-C	TANK WELDMENT SGM24
	B3328201-C	TANK WELDMENT SGM34
2	B3503101	FLUE WELDMENT SG14
	B3503201	FLUE WELDMENT SG14R
	B3503301	FLUE WELDMENT SG14T
	B3503401	FLUE WELDMENT SG18
	B3504101	FLUE WELDMENT LONG SGC (BEFORE 5/03)
	B3504301	FLUE WELDMENT SG18F
	B3504401	FLUE WELDMENT SHORT FLUE SGC
	B3504901	FLUE WELDMENT SGM1824
	B3504902	FLUE WELDMENT SGM24
	B3504903	FLUE WELDMENT SGM34
3	60131001	BALL VALVE 1-1/4 FULL PORT REVERSIBLE LUG LEFT HAND SG14T
	60131002	BALL VALVE 1-1/4 FULL PORT REVERSIBLE LUG RIGHT HAND
	60131003	BALL VALVE 1-1/4 FULL PORT REVERSIBLE LUG LEFT HAND LOCKING SG14T
	60131004	BALL VALVE 1-1/4 FULL PORT REVERSIBLE LUG RIGHT HAND LOCKING
	60131005	BALL VALVE 1-1/4 FULL PORT REVERSIBLE LUG RIGHT HAND LOCKING SGM
	PP10368	BALL VALVE 1-1/4 FULL PORT STANDARD
	PP10962	BALL VALVE 1-1/4 FULL PORT LOCKING STANDARD
4	A8030407	DRAIN LINE PIPING ADAPTER SG, SGM (NON-FILTER)
	A8034301	DRAIN LINE PIPING ADAPTER SG18F
5	B6700604-C	WIRING PROBE SERVICE KIT SG
	B6700608-C	WIRING PROBE SERVICE KIT (BACK UP THERMOSTAT)
6	B6763001	WIRING RETURN OR HOSE JUMPER 24V SGM
7	A4021001-C	DRAIN VALVE INTERLOCK MOUNTING PLATE
8	B5305001	DRAIN VALVE INTERLOCK SENSOR
9	PP10263	PROXIMITY ACTUATOR SWITCH
10	A3525901	FLUE GASKET SG14T
11	P7036726	STEEL TANK PLUG 1/4NPT
12	60130101	TANK REAR ADAPTER 37.5 FLARE SWIVEL X 1/2NPT
	P7036729	STEEL TANK PLUG 1/2NPT
13	A1406802	CLAMP PROBE THERMISTOR COMPUTER/DIGITAL/SOLID STATE
	A1406702	CLAMP HIGH LIMIT THERMOSTAT SG MILLIVOLT
	A1406902	CLAMP TEMPERATURE PROBE SG14T I-12/3300/SS THERMOSTAT
	A1402102-C	CLAMP THERMOSTAT BULB SG14T MILLIVOLT
	A1407002	CLAMP HIGH LIMIT SG14T
14	PP10266	SCREW 4-40 X 1/4 ROUND HEAD ZN
15	PP10686	SCREW 6-32 X 1/4 ROUND HEAD PHILLIPS ZN
16	PP11366	SCREW 10-24 X 5/8 PAN HEAD SST THREAD FORMING
17	PP10023	SCREW 10-24 X 3/8 SELF TAPPING
18	P0076100	SCREW 10-24 X 3/4 SELF TAPPING
19	P0092300	NUT HEX 10-24 KEP ZN
20	A3527101-C	FLUE DEFLECTOR SGC

Tank & Flue Drawing A

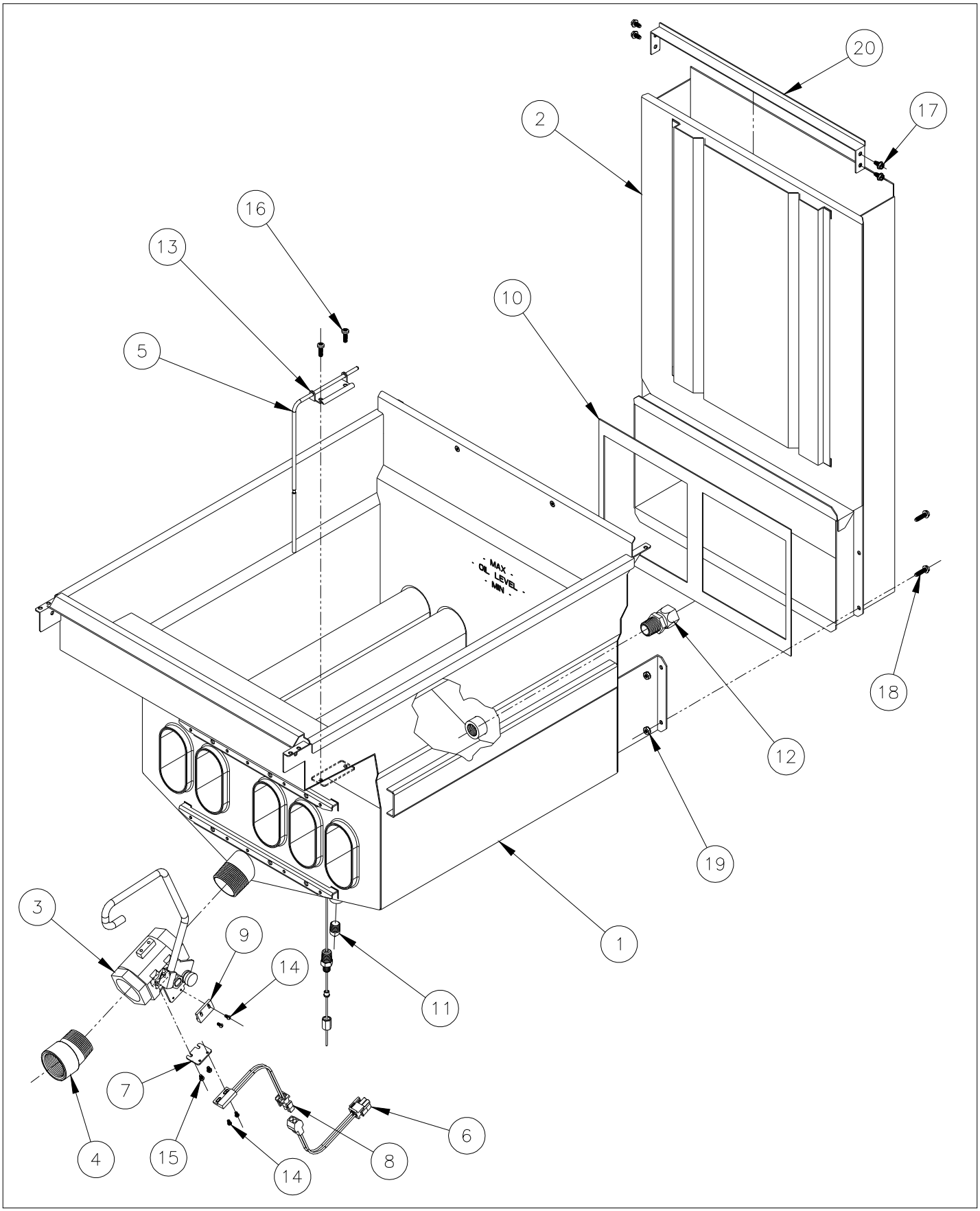

B) BURNER ASSEMBLY

Burner Assembly Drawing B Parts List B(A)

ITEM #	PART #	PART DESCRIPTION
1	SEE PARTS LIST B(B)	BURNER MANIFOLD WELDMENT
2	B8042001	SELF-CLEANING BURNER RUNNER TUBE SG14, SG14R
	B8042002	SELF-CLEANING BURNER RUNNER TUBE SG18
	B8042003	SELF-CLEANING BURNER RUNNER TUBE LEFT-HAND SG14T
	B8042004	SELF-CLEANING BURNER RUNNER TUBE RIGHT-HAND SG14T
3	60147801	THERMAL-LIMIT SWITCH WITH MANUAL RESET
4	A8028401	GASKET BURNER BRACKET SG14R,SGM1824
	A8039601	GASKET BURNER BRACKET SGM24
	A8039701	GASKET BURNER BRACKET SGM34
		3M SUPER 77 MULTIPURPOSE HIGH TACK SPRAY ADHESIVE
		(REQUIRED WHEN INSTALLING NEW ITEM #4)
		DO NOT SPRAY ADHESIVE ACROSS BURNER FACES
5	A8027701	BURNER FLAME JUMPER SG14,SG14R,SG18,SG18F,SGC
	A8031601	BURNER CROSSOVER SGM1824,SGM24,SGM34
	B8034601	BURNER FLAME JUMPER WELDMENT SG14,SG14R,SG18,SG18F
6	A8031701	BURNER SHIELD NATURAL LEFT-HAND SGM1824
	A8034901-C	BURNER COLLAR LP FULL LEFT-HAND SGM1824
	A8031705	BURNER SHIELD NATURAL LEFT-HAND SGM24
	A8034907-C	BURNER COLLAR LP FULL LEFT-HAND SGM24
	A8031709	BURNER SHIELD NATURAL LEFT-HAND SGM34
	A8034911-C	BURNER COLLAR LP FULL LEFT-HAND SGM34
7	A8031703	BURNER SHIELD NATURAL RIGHT-HAND SGM1824
	A8034903-C	BURNER COLLAR LP FULL RIGHT-HAND SGM1824
	A8031707	BURNER SHIELD NATURAL RIGHT-HAND SGM24
	A8034909-C	BURNER COLLAR LP FULL RIGHT-HAND SGM24
	A8031711	BURNER SHIELD NATURAL RIGHT-HAND SGM34
	A8034913-C	BURNER COLLAR LP FULL RIGHT-HAND SGM34
8	B8037301-C	BURNER SLOTTED-FACE NATURAL
	B8037302-C	BURNER SLOTTED-FACE LP
	B8041901	BURNER INCONEL 601 WIRE-FACE SCREEN NATURAL SCB & LP
		(REPLACES B8030001)
9	60127501	FITTING ADAPTER FLARED 15/16-16 UN-2A X 1/2 FNPT BRASS
10	60129701	FITTING 1/4 MNPT X .344-32 UNS ORIFICE TIP BRASS
11A	60132801	FITTING TEST PRESSURE PLUG 1/8-27 (CE)
11B	N/A	PLUG 1/8 NPT 3/16 HEX SOCKET STEEL
12	SEE PARTS LIST B(B)	ORIFICE TIP
13	PP10023	SCREW 10-24 X 3/8 SELF TAPPING
14	PP10687	SCREW 6-32 X 5/16 TRUSS HEAD PHILLIPS ZN
15	SEE PARTS LIST B(B)	BURNER BRACKET
16	A2036904-C	SELF-CLEANING BURNER HIGH-LIMIT BRACKET SG14, SG14R, SG18
	A2036902-C	SELF-CLEANING BURNER HIGH-LIMIT BRACKET LEFT-HAND SG14T
	A2036906-C	SELF-CLEANING BURNER HIGH-LIMIT BRACKET RIGHT-HAND SG14T
17	P0075300	SCREW 10-16 X 5/8 HEX HEAD SELF-DRILLING
18	A8039901	BURNER SHROUD SGM34
19 NOT SHOWN (INCLUDES ITEMS: 1, 5-10, 11B, 13, 15, & 18)	B8031603	BURNER ASSEMBLY INCONEL 601 WIRE-FACE SG14
	B8031702	BURNER ASSEMBLY SLOT FACE NATURAL SG14R
	B8031705	BURNER ASSEMBLY INCONEL 601 WIRE-FACE SG14R
	B8031803	BURNER ASSEMBLY INCONEL 601 WIRE-FACE SG18
	B8033002	BURNER ASSEMBLY INCONEL 601 WIRE-FACE SG14T
	B8042602	BURNER ASSEMBLY INCONEL 601 WIRE-FACE SGM1824
	B8042702	BURNER ASSEMBLY INCONEL 601 WIRE-FACE SGM24
	B8042802	BURNER ASSEMBLY INCONEL 601 WIRE-FACE SGM34

Burner Assembly Drawing B

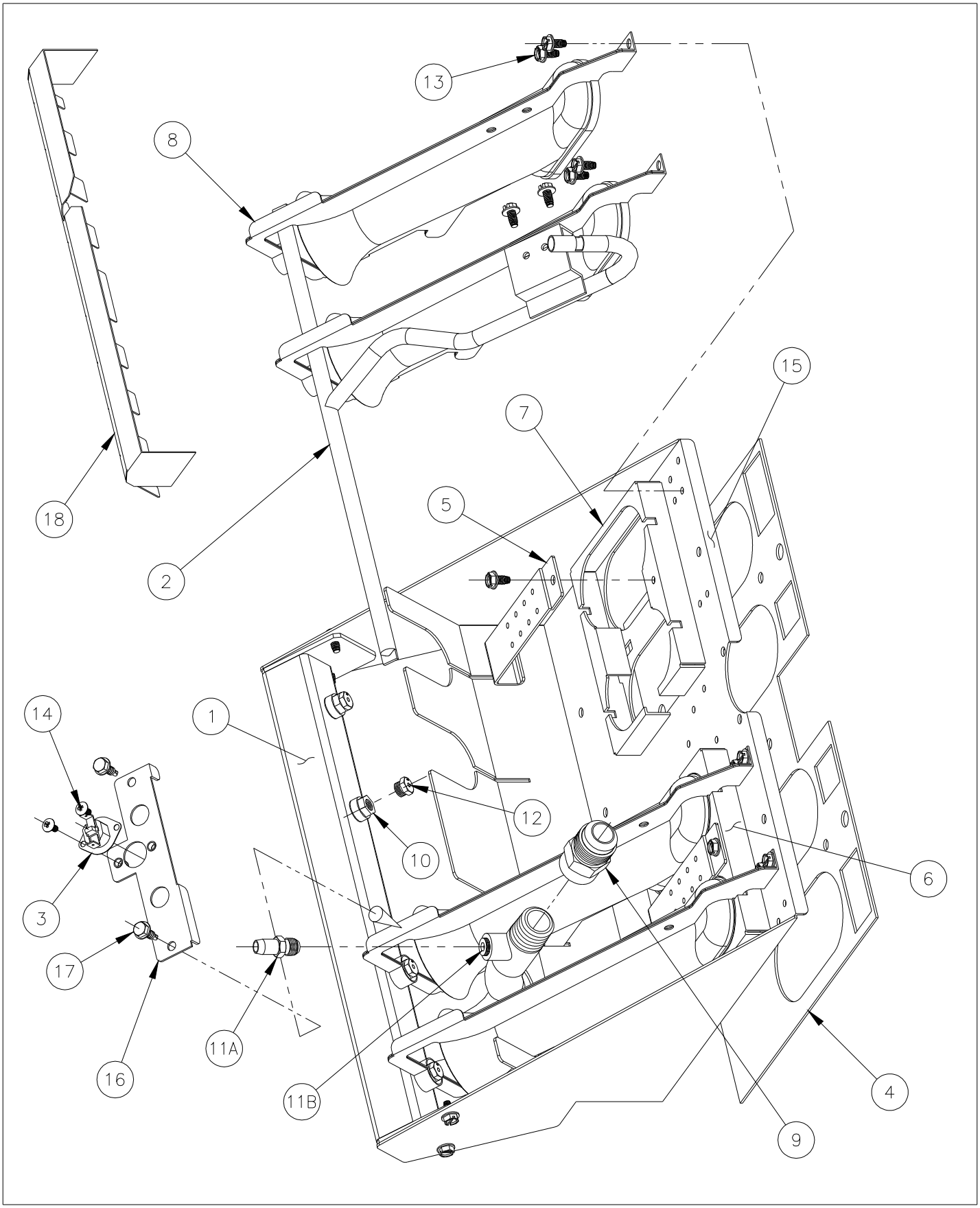

Burner Assembly Drawing B Parts List B(B)

ITEM #	PART #	PART DESCRIPTION
1	B8029701	BURNER MANIFOLD WELDMENT SG18F
	B8029801	BURNER MANIFOLD WELDMENT SG18
	B8029901	BURNER MANIFOLD ASSEMBLY SG14T
	B8035301	BURNER MANIFOLD WELDMENT SGC
	B8039101	BURNER MANIFOLD WELDMENT CENTER-TAP SG14, SG14R (REPLACES B8029701)
	B8042301	BURNER MANIFOLD WELDMENT SGM1824
	B8042401	BURNER MANIFOLD WELDMENT SGM24
	B8042501	BURNER MANIFOLD WELDMENT SGM34
12	A7513701	ORIFICE TIP 1.45mm DIA
	P6071309	ORIFICE TIP 1/16 DIA
	P6071336	ORIFICE TIP #36 DIA
	P6071337	ORIFICE TIP #37 DIA
	P6071338	ORIFICE TIP #38 DIA
	P6071339	ORIFICE TIP #39 DIA
	P6071340	ORIFICE TIP #40 DIA
	P6071341	ORIFICE TIP #41 DIA
	P6071342	ORIFICE TIP #42 DIA
	P6071343	ORIFICE TIP #43 DIA
	P6071344	ORIFICE TIP #44 DIA
	P6071353	ORIFICE TIP #53 DIA
	P6071354	ORIFICE TIP #54 DIA
	P6071355	ORIFICE TIP #55 DIA
	PP10859	ORFICE TIP 1.51 mm DIA
15	A8027901	BURNER BRACKET SG14
	A8028001	BURNER BRACKET SG14R
	A8028101	BURNER BRACKET SG14T
	A8028201	BURNER BRACKET SG18
	A8033201	BURNER BRACKET SGC
	A8033701	BURNER BRACKET SG18F
	A8039301	BURNER BRACKET SGM1824
	A8039401	BURNER BRACKET SGM24
	A8039501	BURNER BRACKET SGM34

This Page Left Intentionally Blank

C) GAS TRAIN

Gas Train Drawing C1 Parts List

ITEM#	PART#	PART DESCRIPTION
1	60125901	TUBE, VENT GAS VALVE
2	60127601	FITTING,ADAPTER FEMALE SWIVEL X 1/2 MPT
3	A8029001-C	PIPING, VALVE SHIELD SG, SGC, SG18F
	A8032101-C	PIPING, VALVE SHIELD SGM 24V
4	60127401	FITTING, ELBOW MALE FLARE X MPT
5	P0007300	SCREW, 8-32 X 1/4 HEX HEAD SLOTTED ZN
6	P7037092	NIPPLE, BLACK 1/2 NPT X 1.5
7	60127501	FITTING, ADAPTER MALE FLARE X 1/2 FPT
	60133602	FITTING,GAS RESTRICTOR 1/2"NPT CE 3.25MM (UNREGULATED ONLY)
8	A8030101	PIPING, VALVE SHIELD SG14T
9	A8029105	COUPLING, GAS SUPPLY SHORT SG, MKG (PRIOR TO 2/05: USE A8029103)
10	60128101	VALVE, GAS SUPPLY SHUTOFF
11	60128014	TUBING, FLEXIBLE WITH FITTINGS 16 GAS SGC, (SG PRIOR TO 2/05)
	60128015	TUBING, FLEXIBLE WITH FITTINGS 22 GAS (SG AFTER 2/05)
	60128016	TUBING, FLEXIBLE WITH FITTINGS 28 GAS SGM, SG18F
12	P7037090	NIPPLE, BLACK 1/2 NPT CL
13	B8034701	PIPING, GAS INLET MANIFOLD WELDMENT SG14T
14	P7037750	ELBOW, BLACK STREET 90 1/2 NPT

Gas Train Drawing C1

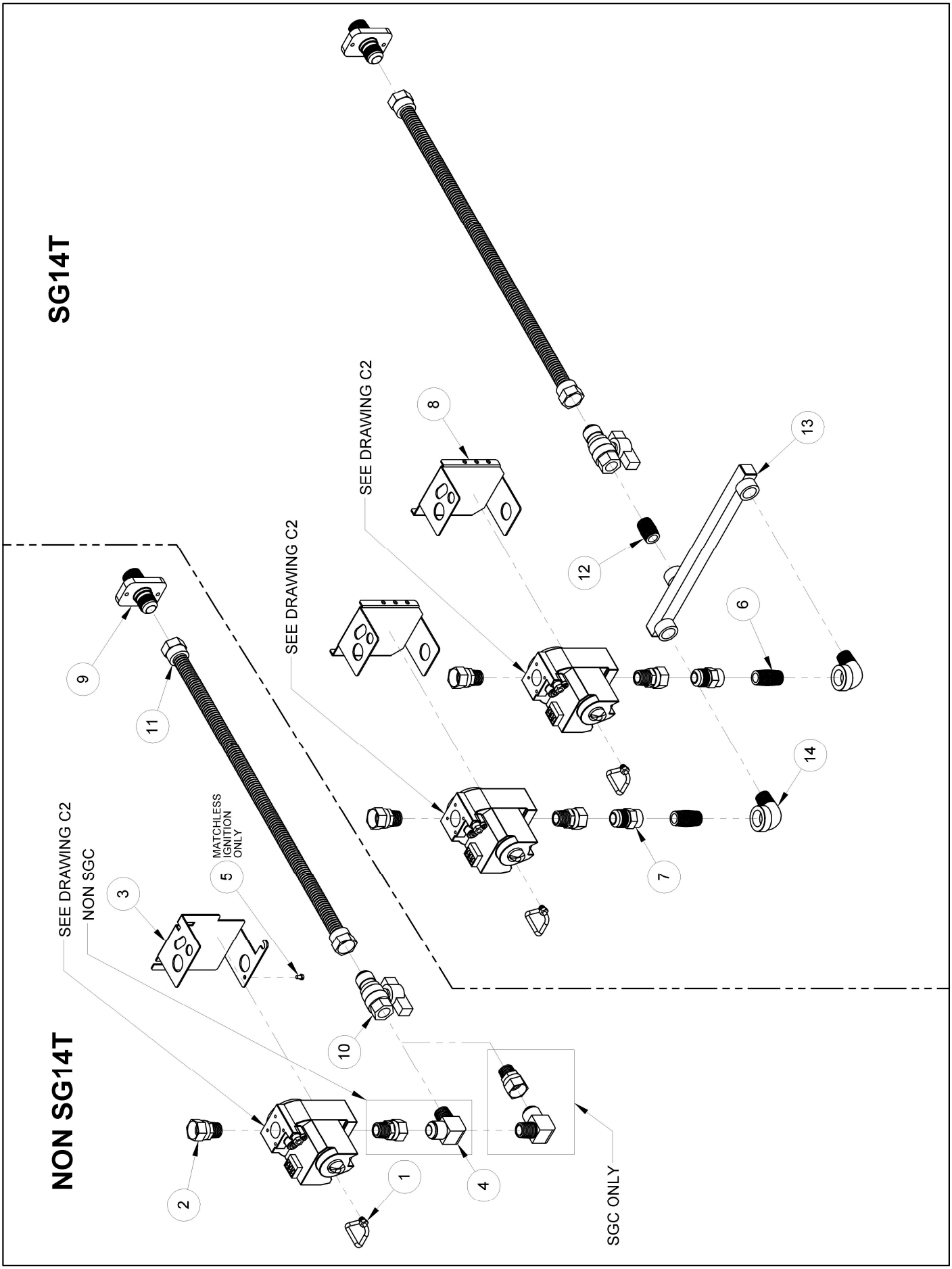

Gas Train Drawing C2 Parts List

ITEM#	PART#	PART DESCRIPTION
1	60113501-C	VALVE, GAS VR8204 24V FAST NAT SG
	60113502-C	VALVE, GAS VR8204 24V FAST LP SG
	60113503-C	VALVE, GAS VR8204 24V FAST CE NAT SG
	60113504-C	VALVE, GAS VR8204 24V FAST CE LP SG
	60113505-C	VALVE, GAS VR8204 24V FAST CE UNREGULATED NAT SG
	60148701-C	VALVE, GAS VR8304M 24V FAST NAT SGM
	60148702-C	VALVE, GAS VR8304M 24V FAST LP SGM
2	60125201-C	VALVE, GAS VS820 NAT SG, SGC, SG18F
	60125202-C	VALVE, GAS VS820 LP SG, SGC, SG18F
3	60132901-C	VALVE, GAS U7000 CE NAT SG, SGC, SG18F
	60132902-C	VALVE, GAS U7000 CE LP SG, SGC, SG18F
	60132903-C	VALVE, GAS U7000 CE UNREGULATED SG, SGC, SG18F
4	60132801	FITTING, TEST PRESSURE PLUG
5	A8035302	PIPING, PILOT BRACKET SG14 SG14R SG18
	A8035402	PIPING, PILOT BRACKET SG14T
6	A8035002	PIPING, PILOT BRACKET WITH TAB SG14 SG14R SG18
	A8035102	PIPING, PILOT BRACKET WITH TAB SG14T
7	A8039802	PIPING, PILOT BRACKET MOUNT SGM
8	60130901	PILOT, INLINE EI NAT 1.5
	60130902	PILOT, INLINE EI LP 1.5
9	60130905	PILOT, INLINE EI NAT 2.98
	60130906	PILOT, INLINE EI LP 2.98
10	60128801	PILOT, REVERSE STANDING NAT SG
	60128802	PILOT, REVERSE STANDING LP SG
11	60119001	TUBE, FLEXIBLE WITHOUT FITTINGS 18 X 1/4 OD SG, SG18F, SGC
	60119011	TUBE, FLEXIBLE WITHOUT FITTINGS 18 X 1/4 OD 3/4 STR SGM1824
	60119012	TUBE, FLEXIBLE WITHOUT FITTINGS 30 X 1/4 OD 3/4 STR SGM24/34
12	60088001	SCREW, 10-32 X 1/4 HEX HEAD SST
13	60088006	SCREW, 10-32 X 1/2 HEX HEAD SST
14	60125501	THERMOPILE, MILLIVOLT
15	P5047540	THERMOCOUPLE T46 24
16	A8035201	PIPING, PILOT BRACKET ADD-ON SG CE
17	PP11373	NUT, HEX KEP 10-32 ZN
18	60148101	VALVE, SOLENOID 24VAC
19	A8039001	PIPING, TUBING SCB SG
20	P7037797	FITTING, COMPRESSION ELBOW BRASS 1/4TU X 1/8MPT
21	PP10934	FITTING, COMPRESSION BRASS STRAIGHT 1/4TU X 1/8MPT
22	60119010	TUBE, FLEXIBLE WITHOUT FITTINGS 6 X 1/4 OD
23	2908-0940501	ORIFICE, PILOT RUNNER TUBE #52 NAT SG14, SG14R, SG14T
	2908-0940502	ORIFICE, PILOT RUNNER TUBE #68 LP SG
	2908-0940503	ORIFICE, PILOT RUNNER TUBE #50 NAT SG18
24	A2036701-C	CONTROL BOX, PILOT ORIFICE RETAINING BRACKET SG14
25	A2036801-C	CONTROL BOX, PILOT ORIFICE RETAINING BRACKET SG14T LH
26	A2036802-C	CONTROL BOX, PILOT ORIFICE RETAINING BRACKET SG14T RH
27	PP10023	SCREW, 10-24 X 3/8 SELF TAPPING
28A	B6783401	WIRING, IGNITION CABLE WITH GROUND WRAP 20" SG*
28B	B6783402	WIRING, IGNITION CABLE WITH GROUND WRAP 23" SGM*

Gas Train Drawing C2

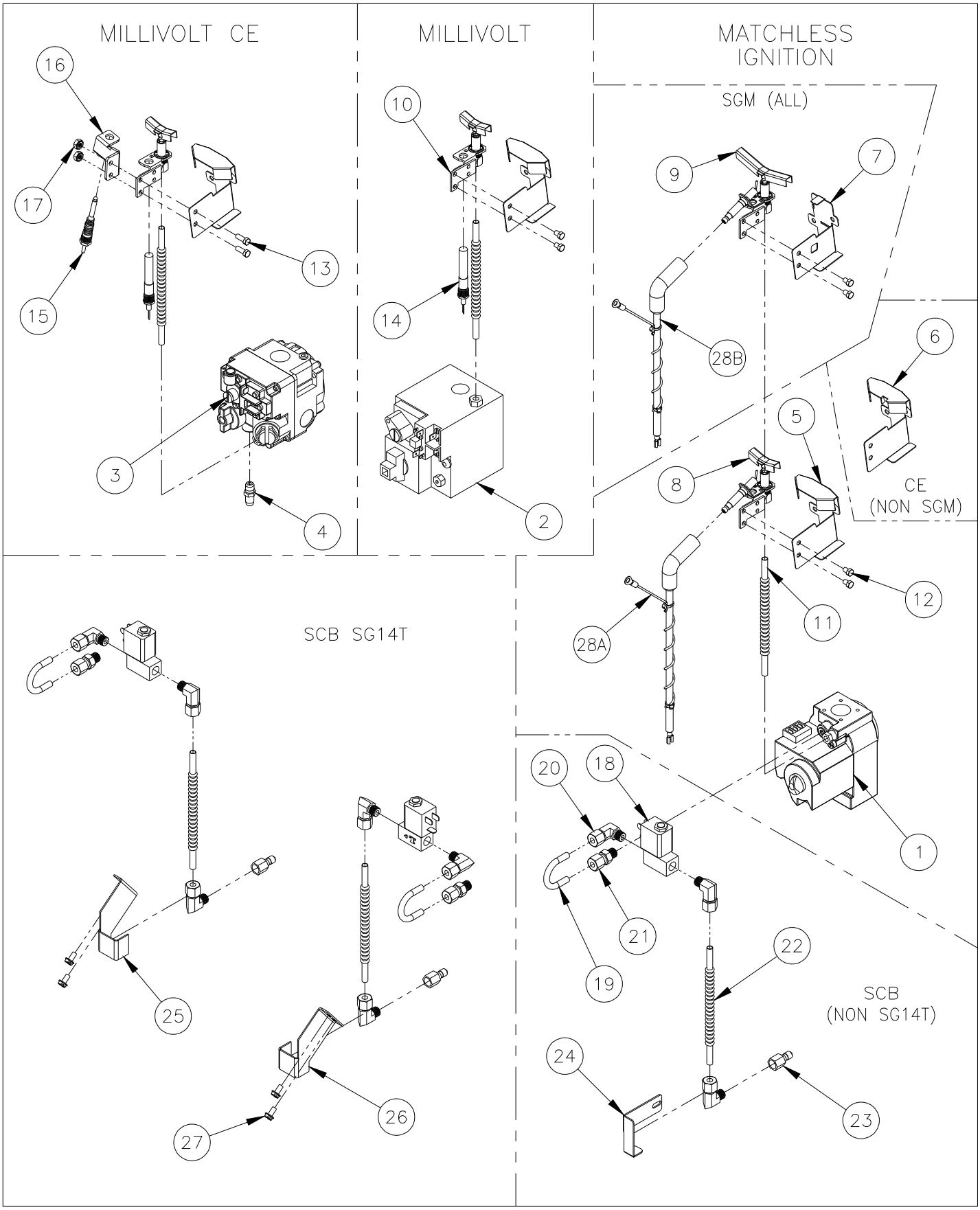

D) GAS CONVERSION KITS

Gas Conversion Kits Quick Reference

MILLIVOLT SYSTEM, HONEYWELL VS820 GAS VALVE

COVERING ALL COUNTRIES EXCEPT:

Turkey, Switzerland, Slovenia, Slavakia, Spain, Romania, Bulgaria, Czech Republic, England, Scotland, Wales, Hungary, Ireland, Luxembourg, Poland, Portugal, France, Germany, South Korea, Australia, Belgium, Cyprus, Malta, Austria, Denmark, Estonia, Finland, Greece, Italy, Latvia, Lithuania, Norway, Sweden

For these countries see parts lists D5, D6, D7, or D8

BURNER TYPE	WIRE FACED BURNERS				SLOT FACED BURNERS			
	NAT TO LP	PARTS LIST	LP TO NAT	PARTS LIST	NAT TO LP	PARTS LIST	LP TO NAT	PARTS LIST
SG14	B7510084-C	D2	B7510081-C	D2	B8043205-C	D1	B8043209-C	D1
SG14R	B7510085-C	D2	B7510082-C	D2	B8043206-C	D1	B8043210-C	D1
SG14T	B7510086-C	D2	B7510083-C	D2	B8043207-C	D1	B8043211-C	D1
SG18	B7510084-C	D2	B7510081-C	D2	B8043208-C	D1	B8043212-C	D1
SG14 DI	B7510084-C	D2	B7510081-C	D2	N/A		N/A	
SG14R DI	B7510085-C	D2	B7510082-C	D2	B8043206-C	D1	B8043210-C	D1
SG14T DI	B7510086-C	D2	B7510083-C	D2	N/A		N/A	
SG18DI	B7510084-C	D2	B7510081-C	D2	N/A		N/A	
SGC SHORT FLUE	N/A		N/A		B8043229-C	D3	B8043230-C	D3
SGC TALL FLUE (PRIOR TO 5/03)	N/A		N/A		B8043229-C	D3	B8043231-C	D3
SG18F	N/A		N/A		B8043205-C	D1	B8043209-C	D1

24VAC SYSTEM, HONEYWELL VR8204 GAS VALVE (VR8304M MEGA)

BURNER TYPE	WIRE FACED OR SCB BURNERS				SLOT FACED BURNERS			
	NAT TO LP	PARTS LIST	LP TO NAT	PARTS LIST	NAT TO LP	PARTS LIST	LP TO NAT	PARTS LIST
SG14	B7510090-C	D2	B7510087-C	D2	B8043213-C	D1	B8043217-C	D1
SG14R	B7510091-C	D2	B7510088-C	D2	B8043214-C	D1	B8043218-C	D1
SG14T	B7510092-C	D2	B7510089-C	D2	B8043215-C	D1	B8043219-C	D1
SG18	B7510090-C	D2	B7510087-C	D2	B8043216-C	D1	B8043220-C	D1
SGM1824	B8043232-C	D4	B8043233-C	D4	N/A		N/A	
SGM24	B8043234-C	D4	B8043235-C	D4	N/A		N/A	
SGM34	B8043236-C	D4	B8043237-C	D4	N/A		N/A	

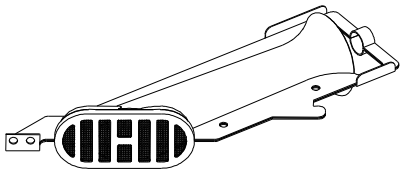

WIRE FACED OR SCB BURNER

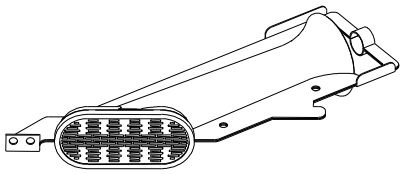

NATURAL GAS SLOT FACED BURNER

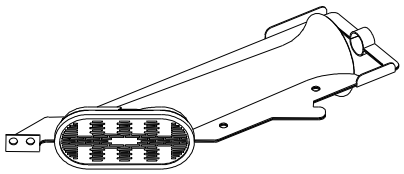

LP GAS SLOT FACED BURNER

BURNER COLLARS (SGM ONLY)

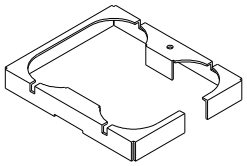

NATURAL GAS BURNER COLLAR

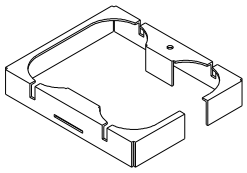

LP GAS BURNER COLLAR

Gas Conversion Kits Simple Instructions Drawing D

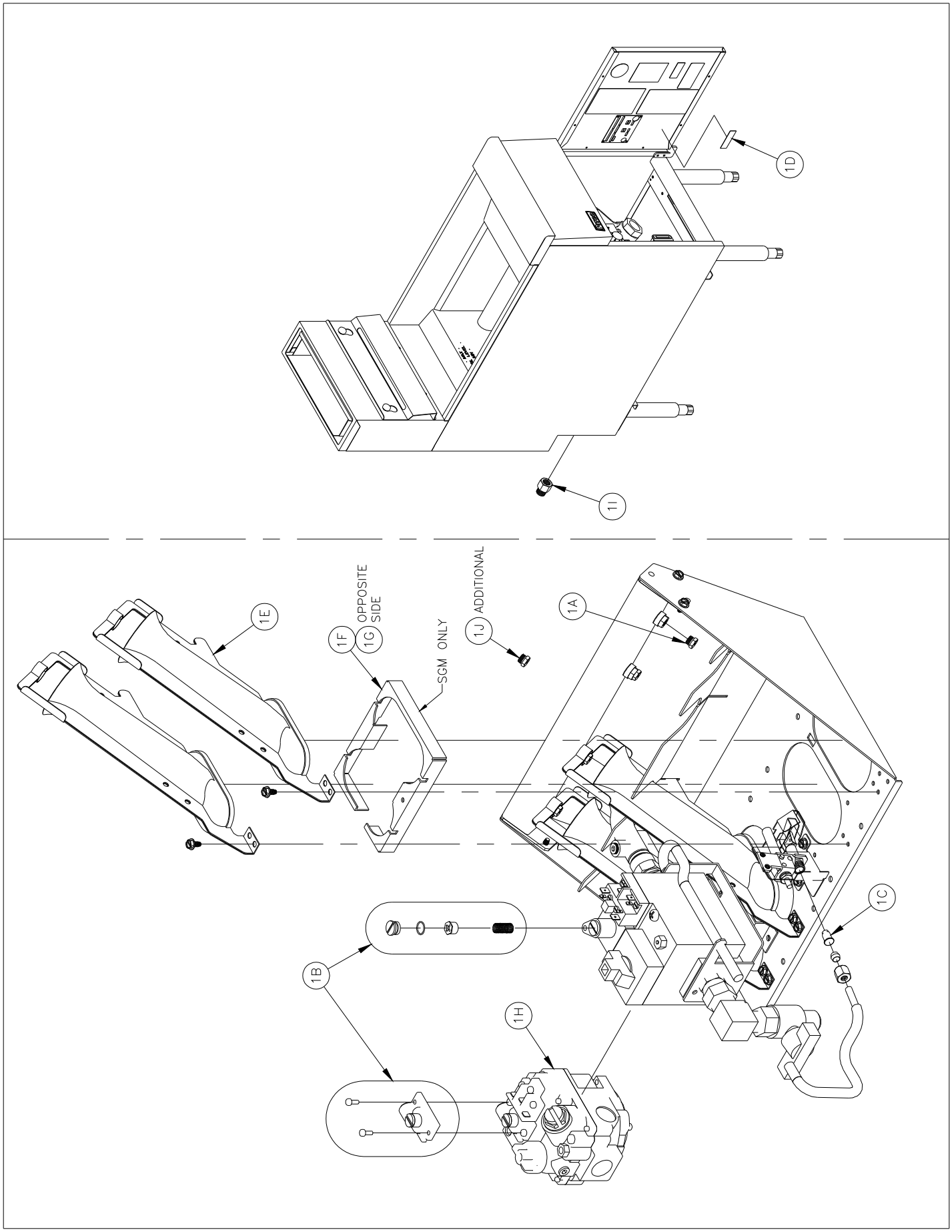

Gas Conversion Kits Slot Face Burners Parts List D1

SLOT FACED BURNERS NATURAL TO LP

ITEM #	MODELS	VALVE	PART #	PART DESCRIPTION	QTY
1	**SG14,SG18F**	**VS820**	**B8043205-C**	**GAS CONV KIT SLOT FACED NAT TO LP VS820 SG14**	
	SG14R, SG14RDI	**VS820**	**B8043206-C**	**GAS CONV KIT SLOT FACED NAT TO LP VS820 SG14R**	
	SG14T	**VS820**	**B8043207-C**	**GAS CONV KIT SLOT FACED NAT TO LP VS820 SG14T**	
	SG18	**VS820**	**B8043208-C**	**GAS CONV KIT SLOT FACED NAT TO LP VS820 SG18**	
	SG14	**VR8204**	**B8043213-C**	**GAS CONV KIT SLOT FACED NAT TO LP VR8204 SG14**	
	SG14R	**VR8204**	**B8043214-C**	**GAS CONV KIT SLOT FACED NAT TO LP VR8204 SG14R**	
	SG14T	**VR8204**	**B8043215-C**	**GAS CONV KIT SLOT FACED NAT TO LP VR8204 SG14T**	
	SG18	**VR8204**	**B8043216-C**	**GAS CONV KIT SLOT FACED NAT TO LP VR8204 SG18**	
1A	SG14, SG18F	VS820/VR8204	P6071353	ORIFICE TIP #53 DIA	4
	SG14R, SG14RDI	VS820/VR8204	P6071309	ORIFICE TIP 1/16 DIA	4
	SG14T	VS820/VR8204	A7513701	ORIFICE TIP 1.45mm DIA	4
	SG18	VS820/VR8204	P6071353	ORIFICE TIP #53 DIA	5
1B	SG14, SG18F, SG18, SG14R, SG14RDI	VS820	60126502	GAS VALVE CONV KIT VS820 NAT TO LP	1
	SG14T	VS820	60126502	GAS VALVE CONV KIT VS820 NAT TO LP	2
	SG14, SG18, SG14R	VR8204	PP11141	GAS VALVE CONV KIT VR8204 NAT TO LP	1
	SG14T	VR8204	PP11141	GAS VALVE CONV KIT VR8204 NAT TO LP	2
1C	SG14, SG18F, SG18, SG14R, SG14RDI	VS820/VR8204	P6071665	ORFICE PILOT SPUD LP .016 DIA	1
	SG14T	VS820/VR8204	P6071665	ORFICE PILOT SPUD LP .016 DIA	2
1D	SG14, SG18F, SG14T SG14R, SG14RDI, SG18	VS820/VR8204	PP10426	GAS CONV NOTICE LABEL NAT TO LP	1
1E	SG14, SG18F, SG14T, SG14R, SG14RDI	VS820/VR8204	B8037302-C	BURNER SLOTTED-FACE 304-SST LP	4
	SG18	VS820/VR8204	B8037302-C	BURNER SLOTTED-FACE 304-SST LP	5

SLOT FACED BURNERS LP TO NATURAL

ITEM #	MODELS	VALVE	PART #	PART DESCRIPTION	QTY
1	**SG14,SG18F**	**VS820**	**B8043209-C**	**GAS CONV KIT SLOT FACED LP TO NAT VS820 SG14**	
	SG14R, SG14RDI	**VS820**	**B8043210-C**	**GAS CONV KIT SLOT FACED LP TO NAT VS820 SG14R**	
	SG14T	**VS820**	**B8043211-C**	**GAS CONV KIT SLOT FACED LP TO NAT VS820 SG14T**	
	SG18	**VS820**	**B8043212-C**	**GAS CONV KIT SLOT FACED LP TO NAT VS820 SG18**	
	SG14	**VR8204**	**B8043217-C**	**GAS CONV KIT SLOT FACED LP TO NAT VR8204 SG14**	
	SG14R	**VR8204**	**B8043218-C**	**GAS CONV KIT SLOT FACED LP TO NAT VR8204 SG14R**	
	SG14T	**VR8204**	**B8043219-C**	**GAS CONV KIT SLOT FACED LP TO NAT VR8204 SG14T**	
	SG18	**VR8204**	**B8043220-C**	**GAS CONV KIT SLOT FACED LP TO NAT VR8204 SG18**	
1A	SG14, SG18F	VS820/VR8204	P6071341	ORIFICE TIP #41 DIA	4
	SG14R, SG14RDI	VS820/VR8204	P6071338	ORIFICE TIP #38 DIA	4
	SG14T	VS820/VR8204	P6071343	ORIFICE TIP #43 DIA	4
	SG18	VS820/VR8204	P6071341	ORIFICE TIP #41 DIA	5
1B	SG14, SG18F, SG18, SG14R, SG14RDI	VS820	60126501	GAS VALVE CONV KIT VS820 LP TO NAT	1
	SG14T	VS820	60126501	GAS VALVE CONV KIT VS820 LP TO NAT	2
	SG14, SG18, SG14R	VR8204	PP11319	GAS VALVE CONV KIT VR8204 LP TO NAT	1
	SG14T	VR8204	PP11319	GAS VALVE CONV KIT VR8204 LP TO NAT	2
1C	SG14, SG18F, SG18, SG14R, SG14RDI	VS820/VR8204	P6071666	ORFICE PILOT SPUD NAT .022 DIA	1
	SG14T	VS820/VR8204	P6071666	ORFICE PILOT SPUD NAT .022 DIA	2
1D	SG14, SG18F, SG14T SG14R, SG14RDI, SG18	VS820/VR8204	PP10427	GAS CONV NOTICE LABEL LP TO NAT	1
1E	SG14, SG18F, SG14T, SG14R, SG14RDI	VS820/VR8204	B8037301-C	BURNER SLOTTED-FACE 304-SST NAT	4
	SG18	VS820/VR8204	B8037301-C	BURNER SLOTTED-FACE 304-SST NAT	5

Gas Conversion Kits Wire Face Burners Parts List D2

WIRE FACED OR SCB BURNERS NATURAL TO LP

ITEM #	MODELS	VALVE	PART #	PART DESCRIPTION	QTY
1	**SG14, SG14DI, SG18, SG18DI**	**VS820**	**B7510084-C**	**GAS CONV KIT NAT TO LP VS820 SG14,SG18**	
	SG14R, SG14RDI	**VS820**	**B7510085-C**	**GAS CONV KIT NAT TO LP VS820 SG14R**	
	SG14T, SG14TDI	**VS820**	**B7510086-C**	**GAS CONV KIT NAT TO LP VS820 SG14T**	
	SG14, SG18	**VR8204**	**B7510090-C**	**GAS CONV KIT NAT TO LP VR8204 SG14,SG18**	
	SG14R	**VR8204**	**B7510091-C**	**GAS CONV KIT NAT TO LP VR8204 SG14R**	
	SG14T	**VR8204**	**B7510092-C**	**GAS CONV KIT NAT TO LP VR8204 SG14T**	
1A	SG14, SG14DI, SG18, SG18DI	VS820/VR8204	P6071353	ORIFICE TIP #53 DIA	5
	SG14R, SG14RDI	VS820/VR8204	P6071309	ORIFICE TIP 1/16 DIA	4
	SG14T, SG14TDI	VS820/VR8204	A7513701	ORIFICE TIP 1.45mm DIA	4
1B	SG14, SG14DI, SG14R, SG14RDI, SG18, SG18DI	VS820	60126502	GAS VALVE CONV KIT VS820 NAT TO LP	1
	SG14T, SG14TDI	VS820	60126502	GAS VALVE CONV KIT VS820 NAT TO LP	2
	SG14, SG18, SG14R	VR8204	PP11141	GAS VALVE CONV KIT VR8204 NAT TO LP	1
	SG14T	VR8204	PP11141	GAS VALVE CONV KIT VR8204 NAT TO LP	2
1C	SG14, SG14DI, SG14R, SG14RDI, SG18, SG18DI	VS820/VR8204	P6071665	ORFICE PILOT SPUD LP .016 DIA	1
	SG14T, SG14TDI	VS820/VR8204	P6071665	ORFICE PILOT SPUD LP .016 DIA	2
1D	SG14, SG14DI, SG14R, SG14T SG14TDI, SG14RDI, SG18, SG18DI	VS820/VR8204	PP10426	GAS CONV NOTICE LABEL NAT TO LP	1

WIRE FACED OR SCB BURNERS LP TO NATURAL

ITEM #	MODELS	VALVE	PART #	PART DESCRIPTION	QTY
1	**SG14, SG14DI, SG18, SG18DI**	**VS820**	**B7510081-C**	**GAS CONV KIT LP TO NAT VS820 SG14,SG18**	
	SG14R, SG14RDI	**VS820**	**B7510082-C**	**GAS CONV KIT LP TO NAT VS820 SG14R**	
	SG14T, SG14TDI	**VS820**	**B7510083-C**	**GAS CONV KIT LP TO NAT VS820 SG14T**	
	SG14, SG18	**VR8204**	**B7510087-C**	**GAS CONV KIT LP TO NAT VR8204 SG14,SG18**	
	SG14R	**VR8204**	**B7510088-C**	**GAS CONV KIT LP TO NAT VR8204 SG14R**	
	SG14T	**VR8204**	**B7510089-C**	**GAS CONV KIT LP TO NAT VR8204 SG14T**	
1A	SG14, SG14DI, SG18, SG18DI	VS820/VR8204	P6071341	ORIFICE TIP #41 DIA	5
	SG14R, SG14RDI	VS820/VR8204	P6071338	ORIFICE TIP #38 DIA	4
	SG14T, SG14TDI	VS820/VR8204	P6071343	ORIFICE TIP #43 DIA	4
1B	SG14, SG14DI, SG14R, SG14RDI, SG18, SG18DI	VS820	60126501	GAS VALVE CONV KIT VS820 LP TO NAT	1
	SG14T, SG14TDI	VS820	60126501	GAS VALVE CONV KIT VS820 LP TO NAT	2
	SG14, SG18, SG14R	VR8204	PP11319	GAS VALVE CONV KIT VR8204 LP TO NAT	1
	SG14T	VR8204	PP11319	GAS VALVE CONV KIT VR8204 LP TO NAT	2
1C	SG14, SG14DI, SG14R, SG14RDI, SG18, SG18DI	VS820/VR8204	P6071666	ORFICE PILOT SPUD NAT .022 DIA	1
	SG14T, SG14TDI	VS820/VR8204	P6071666	ORFICE PILOT SPUD NAT .022 DIA	2
1D	SG14, SG14DI, SG14R, SG14T SG14TDI, SG14RDI, SG18, SG18DI	VS820/VR8204	PP10427	GAS CONV NOTICE LABEL LP TO NAT	1

Gas Conversion Kits SGC Parts List D3

SGC SLOT FACED BURNERS NATURAL TO LP

ITEM #	FLUE TYPE	PART #	PART DESCRIPTION	QTY
1	**TALL/SHORT**	**B8043229-C**	**GAS CONVERSION KIT SLOT FACED NAT TO LP SGC**	
1A		P6071353	ORIFICE TIP #53 DIA	3
1B		60126502	GAS VALVE CONVERSION KIT VS820 NAT TO LP	1
1C		P6071665	ORFICE PILOT SPUD LP .016 DIA	1
1D		PP10426	GAS CONVERSION NOTICE LABEL NAT TO LP	1
1E		B8037302-C	BURNER SLOTTED-FACE 304-SST LP	3

SGC SLOT FACED BURNERS LP TO NATURAL

ITEM #	FLUE TYPE	PART #	PART DESCRIPTION	QTY
1	**SHORT**	**B8043230-C**	**GAS CONVERSION KIT SLOT FACED LP TO SHORT FLUE NAT SGC**	
	TALL (PRIOR TO 05/03)	**B8043231-C**	**GAS CONVERSION KIT SLOT FACED LP TO TALL FLUE NAT SGC**	
1A	SHORT	P6071343	ORIFICE TIP #43 DIA	3
	TALL (PRIOR TO 05/03)	P6071342	ORIFICE TIP #42 DIA	3
1B	TALL/SHORT	60126501	GAS VALVE CONVERSION KIT VS820 LP TO NAT	1
1C	TALL/SHORT	P6071666	ORFICE PILOT SPUD NAT .022 DIA	1
1D	TALL/SHORT	PP10427	GAS CONVERSION NOTICE LABEL LP TO NAT	1
1E	TALL/SHORT	B8037301-C	BURNER SLOTTED-FACE 304-SST NAT	3

Gas Conversion Kits SGM Parts List D4

SGM WIRE FACED BURNERS NATURAL TO LP

ITEM #	MODELS	PART #	PART DESCRIPTION	QTY
1	**SGM1824**	**B8043232-C**	**GAS CONVERSION KIT NAT TO LP WITH SCB SGM1824**	
	SGM24	**B8043234-C**	**GAS CONVERSION KIT NAT TO LP WITH SCB SGM24**	
	SGM34	**B8043236-C**	**GAS CONVERSION KIT NAT TO LP WITH SCB SGM34**	
1A	SGM1824	P6071309	ORIFICE TIP 1/16 DIA	4
	SGM24	P6071353	ORIFICE TIP #53 DIA	6
	SGM34	P6071353	ORIFICE TIP #53 DIA	8
1B	SGM1824, SGM24, SGM34	PP11141	GAS VALVE CONVERSION KIT VR8204 NAT TO LP	1
1C	SGM1824, SGM24, SGM34	P6071665	ORFICE PILOT SPUD LP .016 DIA	1
1D	SGM1824, SGM24, SGM34	PP10426	GAS CONVERSION NOTICE LABEL NAT TO LP	1
1F	SGM1824	A8034903-C	BURNER COLLAR LP FULL RIGHT-HAND SGM1824	1
	SGM24	A8034909-C	BURNER COLLAR LP FULL RIGHT-HAND SGM24	1
	SGM34	A8034913-C	BURNER COLLAR LP FULL RIGHT-HAND SGM34	1
1G	SGM1824	A8034901-C	BURNER COLLAR LP FULL LEFT-HAND SGM1824	1
	SGM24	A8034907-C	BURNER COLLAR LP FULL LEFT-HAND SGM24	1
	SGM34	A8034911-C	BURNER COLLAR LP FULL LEFT-HAND SGM34	1

SGM WIRE FACED BURNERS LP TO NATURAL

ITEM #	MODELS	PART #	PART DESCRIPTION	QTY
1	**SGM1824**	**B8073233-C**	**GAS CONVERSION KIT LP TO NAT WITH SCB SGM1824**	
	SGM24	**B8043235-C**	**GAS CONVERSION KIT LP TO NAT WITH SCB SGM24**	
	SGM34	**B8043237-C**	**GAS CONVERSION KIT LP TO NAT WITH SCB SGM34**	
1A	SGM1824	P6071340	ORIFICE TIP #40 DIA	4
	SGM24	P6071342	ORIFICE TIP #42 DIA	6
	SGM34	P6071342	ORIFICE TIP #42 DIA	8
1B	SGM1824, SGM24, SGM34	PP11319	GAS VALVE CONVERSION KIT VR8204 LP TO NAT	1
1C	SGM1824, SGM24, SGM34	P6071666	ORFICE PILOT SPUD NAT .022 DIA	1
1D	SGM1824, SGM24, SGM34	PP10427	GAS CONVERSION NOTICE LABEL LP TO NAT	1
1F	SGM1824	A8031703	BURNER SHIELD NAT RIGHT-HAND SGM1824	1
	SGM24	A8031707	BURNER SHIELD NAT RIGHT-HAND SGM24	1
	SGM34	A8031711	BURNER SHIELD NAT RIGHT-HAND SGM34	1
1G	SGM1824	A8031701	BURNER SHIELD NAT LEFT-HAND SGM1824	1
	SGM24	A8031705	BURNER SHIELD NAT LEFT-HAND SGM24	1
	SGM34	A8031709	BURNER SHIELD NAT LEFT-HAND SGM34	1

Gas Conversion Kits Slot Face Burners (CE) Parts List D5

SLOT FACED BURNERS NATURAL TO LP (CE)

Covering countries:

Turkey, Switzerland, Slovenia, Slovakia, Spain, Romania, Bulgaria, Czech Republic, England, Scotland, Wales, Hungary, Ireland, Luxembourg, Poland, Portugal, France, Germany, Belgium

Countries not covered:

1. Country does not use natural gas: Cyprus, Malta

2. Not Approved for use with LP: Austria, Denmark, Estonia, Finland, Greece, Italy, Latvia, Lithuania, Norway, Sweden

3. Not Approved for use with Slot Faced Burners: Australia, South Korea

ITEM #	MODELS	COMMENTS	VALVE	PART #	PART DESCRIPTION	QTY
1A	SG14, SG14DI, SG18F		U7000/VR8204	P6071353	ORIFICE TIP #53 DIA	4
	SG18, SG18DI		U7000/VR8204	P6071353	ORIFICE TIP #53 DIA	5
	SG14R, SG14RDI		U7000/VR8204	P6071309	ORIFICE TIP 1/16 DIA	4
	SG14T, SG14TDI		U7000/VR8204	A7513701	ORIFICE TIP 1.45mm DIA	4
1B	SG14, SG14DI, SG14R, SG14RDI, SG18F, SG18, SG18DI	NOT BELGIUM	U7000	P6071553	REGULATOR KIT U7000 11 LP	1
	SG14T, SG14TDI	NOT BELGIUM	U7000	P6071553	REGULATOR KIT U7000 11 LP	2
	SG14, SG14R	NOT BELGIUM	VR8204	PP11141	GAS VALVE CONV KIT VR8204 NAT TO LP	1
	SG18	NOT BELGIUM				
	SG14T	NOT BELGIUM	VR8204	PP11141	GAS VALVE CONV KIT VR8204 NAT TO LP	2
1C	SG14, SG14DI, SG14R, SG14RDI, SG18F, SG18, SG18DI		U7000/VR8204	P6071665	ORFICE PILOT SPUD LP .016 DIA	1
	SG14T, SG14TDI		U7000/VR8204	P6071665	ORFICE PILOT SPUD LP .016 DIA	2
1E	SG14, SG18F, SG14T SG14R, SG14RDI		U7000/VR8204	B8037302-C	BURNER SLOTTED-FACE 304-SST LP	4
	SG18		U7000/VR8204	B8037302-C	BURNER SLOTTED-FACE 304-SST LP	5
1H	SG14, SG14DI, SG14R, SG14RDI, SG18F, SG18, SG18DI	BELGIUM ONLY	U7000	60132902	GAS VALVE, U7000 MILLIVOLT CE LP	1
	SG14T, SG14TDI	BELGIUM ONLY	U7000	60132902	GAS VALVE, U7000 MILLIVOLT CE LP	2
	SG14, SG18, SG14R	BELGIUM ONLY	VR8204	60113504-C	GAS VALVE, VR8204 24V FAST CE LP	1
	SG14T	BELGIUM ONLY	VR8204	60113504-C	GAS VALVE, VR8204 24V FAST CE LP	2

SLOT FACED BURNERS LP TO NATURAL (CE)

Covering countries:

Turkey, Switzerland, Slovenia, Slovakia, Spain, Romania, Bulgaria, Czech Republic, England, Scotland, Wales, Hungary, Ireland, Luxembourg, Poland, Portugal, France, Germany, Belgium

Countries not covered:

1. Country does not use natural gas: Cyprus, Malta

2. Not Approved for use with LP: Austria, Denmark, Estonia, Finland, Greece, Italy, Latvia, Lithuania, Norway, Sweden

3. Not Approved for use with Slot Faced Burners: Australia, South Korea

ITEM #	MODELS	COMMENTS	VALVE	PART #	PART DESCRIPTION	QTY
1A	SG14, SG14DI, SG18F		U7000/VR8204	P6071341	ORIFICE TIP #41 DIA	4
	SG18, SG18DI		U7000/VR8204	P6071341	ORIFICE TIP #41 DIA	5
	SG14R, SG14RDI		U7000/VR8204	P6071338	ORIFICE TIP #38 DIA	4
	SG14T, SG14TDI		U7000/VR8204	P6071343	ORIFICE TIP #43 DIA	4
1B	SG14, SG14DI, SG14R, SG14R, SG14RDI	NOT BELGIUM	U7000	P6071551	REGULATOR KIT U7000 3.5 NAT	1
	SG18, SG18DI	NOT BELGIUM				
	SG14T, SG14TDI	NOT BELGIUM	U7000	P6071551	REGULATOR KIT U7000 3.5 NAT	2
	SG14, SG14R	NOT BELGIUM	VR8204	PP11319	GAS VALVE CONV KIT VR8204 LP TO NAT	1
	SG18	NOT BELGIUM				
	SG14T	NOT BELGIUM	VR8204	PP11319	GAS VALVE CONV KIT VR8204 LP TO NAT	2
1C	SG14, SG14DI, SG14R, SG14R, SG14RDI SG18, SG18DI		U7000/VR8204	P6071666	ORFICE PILOT SPUD NAT .022 DIA	1
	SG14T, SG14TDI		U7000/VR8204	P6071666	ORFICE PILOT SPUD NAT .022 DIA	2
1E	SG14, SG18F, SG14T SG14R, SG14RDI		U7000/VR8204	B8037301-C	BURNER SLOTTED-FACE 304-SST NAT	4
	SG18		U7000/VR8204	B8037301-C	BURNER SLOTTED-FACE 304-SST NAT	5
1H	SG14, SG14DI, SG14R, SG14RDI, SG18, SG18DI	BELGIUM ONLY	U7000	60132903	GAS VALVE, U7000 MILLIVOLT CE UNREGULATED	1
	SG14T, SG14TDI	BELGIUM ONLY	U7000	60132903	GAS VALVE, U7000 MILLIVOLT CE UNREGULATED	2
	SG14, SG18, SG14R	BELGIUM ONLY	VR8204	60113505-C	GAS VALVE, VR8204 24V FAST CE UNREGULATED	1
	SG14T	BELGIUM ONLY	VR8204	60113505-C	GAS VALVE, VR8204 24V FAST CE UNREGULATED	2
1I	SG14, SG14DI	BELGIUM ONLY	U7000/VR8204	60133203	FITTING,GAS RESTRICTOR 3/4"NPT 4.83MM	1
	SG14R, SG14RDI	BELGIUM ONLY	U7000/VR8204	60133204	FITTING,GAS RESTRICTOR 3/4"NPT 5.18MM	1
	SG18, SG18DI	BELGIUM ONLY	U7000/VR8204	60133205	FITTING,GAS RESTRICTOR 3/4"NPT 5.61MM	1
	SG14T, SG14TDI	BELGIUM ONLY	U7000/VR8204	60133602	FITTING,GAS RESTRICTOR 1/2"NPT 3.25MM	2
1J	SG14, SG14DI	FRANCE, GERMANY ONLY	U7000/VR8204	P6071337	ORIFICE TIP #37 DIA	4
	SG18, SG18DI	FRANCE, GERMANY ONLY	U7000/VR8204	P6071338	ORIFICE TIP #38 DIA	5
	SG14R, SG14RDI	FRANCE, GERMANY ONLY	U7000/VR8204	P6071336	ORIFICE TIP #36 DIA	4
	SG14T, SG14TDI	FRANCE, GERMANY ONLY	U7000/VR8204	P6071341	ORIFICE TIP #41 DIA	4

Gas Conversion Kits Wire Face Burners (CE and Australia) Parts List D6

WIRE FACED OR SCB BURNERS NATURAL TO LP (CE, AUSTRALIA, SOUTH KOREA)

Covering countries:
Turkey, Switzerland, Slovenia, Slovakia, Spain, Romania, Bulgaria, Czech Republic, England, Scotland, Wales, Hungary, Ireland, Luxembourg, Poland, Portugal, France, Germany, South Korea, Australia, Belgium

Countries not covered:

1. Country does not use natural gas: Cyprus, Malta

2. Not Approved for use with LP: Austria, Denmark, Estonia, Finland, Greece, Italy, Latvia, Lithuania, Norway, Sweden

ITEM #	MODELS	COMMENTS	VALVE	PART #	PART DESCRIPTION	QTY
1A	SG14, SG14DI		U7000/VR8204	P6071353	ORIFICE TIP #53 DIA	4
	SG18, SG18DI	NOT SOUTH KOREA	U7000/VR8204	P6071353	ORIFICE TIP #53 DIA	5
	SG14R, SG14RDI		U7000/VR8204	P6071309	ORIFICE TIP 1/16 DIA	4
	SG14T, SG14TDI	NOT SOUTH KOREA, AUSTRALIA	U7000/VR8204	A7513701	ORIFICE TIP 1.45mm DIA	4
	SG14T, SG14TDI	AUSTRALIA ONLY	U7000/VR8204	P6071353	ORIFICE TIP #55 DIA	4
1B	SG14, SG14DI,	NOT BELGIUM	U7000	P6071553	REGULATOR KIT U7000 11 LP	1
	SG14R, SG14RDI					
	SG18, SG18DI	NOT SOUTH KOREA, BELGIUM				
	SG14T, SG14TDI	NOT SOUTH KOREA, BELGIUM	U7000	P6071553	REGULATOR KIT U7000 11 LP	2
	SG14, SG14R	NOT BELGIUM	VR8204	PP11141	GAS VALVE CONV KIT VR8204 NAT TO LP	1
	SG18	NOT SOUTH KOREA, BELGIUM				
	SG14T	NOT SOUTH KOREA, BELGIUM	VR8204	PP11141	GAS VALVE CONV KIT VR8204 NAT TO LP	2
1C	SG14, SG14DI,		U7000/VR8204	P6071665	ORFICE PILOT SPUD LP .016 DIA	1
	SG14R, SG14RDI					
	SG18, SG18DI	NOT SOUTH KOREA				
	SG14T, SG14TDI	NOT SOUTH KOREA	U7000/VR8204	P6071665	ORFICE PILOT SPUD LP .016 DIA	2
1H	SG14, SG14DI, SG14R,	BELGIUM ONLY	U7000	60132902	GAS VALVE, U7000 MILLIVOLT CE LP	1
	SG14RDI, SG18, SG18DI					
	SG14T, SG14TDI	BELGIUM ONLY	U7000	60132902	GAS VALVE, U7000 MILLIVOLT CE LP	2
	SG14, SG18, SG14R	BELGIUM ONLY	VR8204	60113504-C	GAS VALVE, VR8204 24V FAST CE LP	1
	SG14T	BELGIUM ONLY	VR8204	60113504-C	GAS VALVE, VR8204 24V FAST CE LP	2

WIRE FACED OR SCB BURNERS LP TO NATURAL (CE, AUSTRALIA, SOUTH KOREA)

Covering countries:
Turkey, Switzerland, Slovenia, Slovakia, Spain, Romania, Bulgaria, Czech Republic, England, Scotland, Wales, Hungary, Ireland, Luxembourg, Poland, Portugal, France, Germany, South Korea, Australia, Belgium

Countries not covered:

1. Country does not use natural gas: Cyprus, Malta

2. Not Approved for use with LP: Austria, Denmark, Estonia, Finland, Greece, Italy, Latvia, Lithuania, Norway, Sweden

ITEM #	MODELS	COMMENTS	VALVE	PART #	PART DESCRIPTION	QTY
1A	SG14, SG14DI		U7000/VR8204	P6071341	ORIFICE TIP #41 DIA	4
	SG18, SG18DI	NOT SOUTH KOREA, AUSTRALIA	U7000/VR8204	P6071341	ORIFICE TIP #41 DIA	5
	SG18, SG18DI	AUSTRALIA ONLY	U7000/VR8204	P6071342	ORIFICE TIP #42 DIA	5
	SG14R, SG14RDI		U7000/VR8204	P6071338	ORIFICE TIP #38 DIA	4
	SG14T, SG14TDI	NOT SOUTH KOREA, AUSTRALIA	U7000/VR8204	P6071343	ORIFICE TIP #43 DIA	4
	SG14T, SG14TDI	AUSTRALIA ONLY	U7000/VR8204	P6071344	ORIFICE TIP #44 DIA	4
1B	SG14, SG14DI,	NOT BELGIUM	U7000	P6071551	REGULATOR KIT U7000 3.5 NAT	1
	SG14R, SG14RDI					
	SG18, SG18DI	NOT SOUTH KOREA, BELGIUM				
	SG14T, SG14TDI	NOT SOUTH KOREA, BELGIUM	U7000	P6071551	REGULATOR KIT U7000 3.5 NAT	2
	SG14, SG14R	NOT BELGIUM	VR8204	PP11319	GAS VALVE CONV KIT VR8204 LP TO NAT	1
	SG18	NOT SOUTH KOREA, BELGIUM				
	SG14T	NOT SOUTH KOREA, BELGIUM	VR8204	PP11319	GAS VALVE CONV KIT VR8204 LP TO NAT	2
1C	SG14, SG14DI,		U7000/VR8204	P6071666	ORFICE PILOT SPUD NAT .022 DIA	1
	SG14R, SG14RDI					
	SG18, SG18DI	NOT SOUTH KOREA				
	SG14T, SG14TDI		U7000/VR8204	P6071666	ORFICE PILOT SPUD NAT .022 DIA	2
1H	SG14, SG14DI, SG14R,	BELGIUM ONLY	U7000	60132903	GAS VALVE, U7000 MILLIVOLT CE UNREGULATED	1
	SG14RDI, SG18, SG18DI					
	SG14T, SG14TDI	BELGIUM ONLY	U7000	60132903	GAS VALVE, U7000 MILLIVOLT CE UNREGULATED	2
	SG14, SG18, SG14R	BELGIUM ONLY	VR8204	60113505-C	GAS VALVE, VR8204 24V FAST CE UNREGULATED	1
	SG14T	BELGIUM ONLY	VR8204	60113505-C	GAS VALVE, VR8204 24V FAST CE UNREGULATED	2
1I	SG14, SG14DI	BELGIUM ONLY	U7000/VR8204	60133203	FITTING,GAS RESTRICTOR 3/4"NPT 4.83MM	1
	SG14R, SG14RDI	BELGIUM ONLY	U7000/VR8204	60133204	FITTING,GAS RESTRICTOR 3/4"NPT 5.18MM	1
	SG18, SG18DI	BELGIUM ONLY	U7000/VR8204	60133205	FITTING,GAS RESTRICTOR 3/4"NPT 5.61MM	1
	SG14T, SG14TDI	BELGIUM ONLY	U7000/VR8204	60133602	FITTING,GAS RESTRICTOR 1/2"NPT 3.25MM	2
1J	SG14, SG14DI	FRANCE, GERMANY ONLY	U7000/VR8204	P6071337	ORIFICE TIP #37 DIA	4
	SG18, SG18DI	FRANCE, GERMANY ONLY	U7000/VR8204	P6071338	ORIFICE TIP #38 DIA	5
	SG14R, SG14RDI	FRANCE, GERMANY ONLY	U7000/VR8204	P6071336	ORIFICE TIP #36 DIA	4
	SG14T, SG14TDI	FRANCE, GERMANY ONLY	U7000/VR8204	P6071341	ORIFICE TIP #41 DIA	4

SGC SLOT FACED BURNERS NATURAL TO LP (CE)

Covering countries:

Turkey, Switzerland, Slovenia, Slovakia, Spain, Romania, Bulgaria, Czech Republic, England, Scotland, Wales, Hungary, Ireland, Luxembourg, Poland, Portugal, France, Germany, Belgium

Countries not covered:

1. Country does not use natural gas: Cyprus, Malta

2. Not Approved for use with LP: Austria, Denmark, Estonia, Finland, Greece, Italy, Latvia, Lithuania, Norway, Sweden

3. Not Approved for use with Slot Faced Burners: Australia, South Korea

ITEM #	COMMENTS	PART #	PART DESCRIPTION	QTY
1A		P6071354	ORIFICE TIP #54 DIA	3
1B	NOT BELGIUM	P6071553	REGULATOR KIT U7000 11 LP	1
1C		P6071665	ORFICE PILOT SPUD LP .016 DIA	1
1E		B8037302-C	BURNER SLOTTED-FACE 304-SST LP	3
1H	BELGIUM ONLY	60132902	GAS VALVE, U7000 MILLIVOLT CE LP	1

SGC SLOT FACED BURNERS LP TO NATURAL (CE)

Covering countries:

Turkey, Switzerland, Slovenia, Slovakia, Spain, Romania, Bulgaria, Czech Republic, England, Scotland, Wales, Hungary, Ireland, Luxembourg, Poland, Portugal, France, Germany, Belgium

Countries not covered:

1. Country does not use natural gas: Cyprus, Malta

2. Not Approved for use with LP: Austria, Denmark, Estonia, Finland, Greece, Italy, Latvia, Lithuania, Norway, Sweden

3. Not Approved for use with Slot Faced Burners: Australia, South Korea

ITEM #	COMMENTS	PART #	PART DESCRIPTION	QTY
1A		P6071343	ORIFICE TIP #43 DIA	3
1B	NOT BELGIUM	P6071551	REGULATOR KIT U7000 3.5 NAT	1
1C		P6071666	ORFICE PILOT SPUD NAT .022 DIA	1
1E		B8037301-C	BURNER SLOTTED-FACE 304-SST NAT	4
1H	BELGIUM ONLY	60132903	GAS VALVE, U7000 MILLIVOLT CE UNREGULATED	1
1I	BELGIUM ONLY	CONTACT FACTORY	FITTING,GAS RESTRICTOR 3/4"NPT 4.00MM	1
1J	FRANCE, GERMANY ONLY	P6071340	ORIFICE TIP #40 DIA	3

Gas Conversion Kits SGM (CE) Parts List D8

SGM WIRE FACED BURNERS NATURAL TO LP (CE)

Covering countries:

Turkey, Switzerland, Slovenia, Slovakia, Spain, Romania, Bulgaria, Czech Republic, England, Scotland, Wales, Hungary, Ireland, Luxembourg, Poland, Portugal, France, Germany

Countries not covered:

1. Country does not use natural gas: Cyprus, Malta

2. Not Approved for use with LP: Austria, Denmark, Estonia, Finland, Greece, Italy, Latvia, Lithuania, Norway, Sweden

3. Models not Approved for use with LP or Natural gas: Australia, South Korea

4. No Gas Valve available for Unregulated Natural gas: Beglium

ITEM #	MODELS	COMMENTS	PART #	PART DESCRIPTION	QTY
1A	SGM1824		P6071309	ORIFICE TIP 1/16 DIA	4
	SGM24		A7513701	ORIFICE TIP 1.45mm DIA	6
	SGM34		PP10859	ORIFICE TIP 1.51mm DIA	8
1B	SGM1824, SGM24, SGM34		PP11141	GAS VALVE CONV KIT VR8204 NAT TO LP	1
1C	SGM1824, SGM24, SGM34		P6071665	ORFICE PILOT SPUD LP .016 DIA	1
1F	SGM1824		A8034903-C	BURNER COLLAR LP FULL RIGHT-HAND SGM1824	1
	SGM24		A8034909-C	BURNER COLLAR LP FULL RIGHT-HAND SGM24	1
	SGM34		A8034913-C	BURNER COLLAR LP FULL RIGHT-HAND SGM34	1
1G	SGM1824		A8034901-C	BURNER COLLAR LP FULL LEFT-HAND SGM1824	1
	SGM24		A8034907-C	BURNER COLLAR LP FULL LEFT-HAND SGM24	1
	SGM34		A8034911-C	BURNER COLLAR LP FULL LEFT-HAND SGM34	1

SGM WIRE FACED BURNERS LP TO NATURAL (CE)

Covering countries:

Turkey, Switzerland, Slovenia, Slovakia, Spain, Romania, Bulgaria, Czech Republic, England, Scotland, Wales, Hungary, Ireland, Luxembourg, Poland, Portugal, France, Germany

Countries not covered:

1. Country does not use natural gas: Cyprus, Malta

2. Not Approved for use with LP: Austria, Denmark, Estonia, Finland, Greece, Italy, Latvia, Lithuania, Norway, Sweden

3. Models not Approved for use with LP or Natural gas: Australia, South Korea

4. No Gas Valve available for Unregulated Natural gas: Beglium

ITEM #	MODELS	COMMENTS	PART #	PART DESCRIPTION	QTY
1A	SGM1824		P6071340	ORIFICE TIP #40 DIA	4
	SGM24		P6071344	ORIFICE TIP #44 DIA	6
	SGM34		P6071332	ORIFICE TIP #42 DIA	8
1B	SGM1824, SGM24, SGM34		PP11319	GAS VALVE CONV KIT VR8204 LP TO NAT	1
1C	SGM1824, SGM24, SGM34		P6071666	ORFICE PILOT SPUD NAT .022 DIA	1
1F	SGM1824		A8031703	BURNER SHIELD NAT RIGHT-HAND SGM1824	1
	SGM24		A8031707	BURNER SHIELD NAT RIGHT-HAND SGM24	1
	SGM34		A8031711	BURNER SHIELD NAT RIGHT-HAND SGM34	1
1G	SGM1824		A8031701	BURNER SHIELD NAT LEFT-HAND SGM1824	1
	SGM24		A8031705	BURNER SHIELD NAT LEFT-HAND SGM24	1
	SGM34		A8031709	BURNER SHIELD NAT LEFT-HAND SGM34	1
1J	SGM1824	FRANCE, GERMANY ONLY	P6071337	ORIFICE TIP #37 DIA	4
	SGM24	FRANCE, GERMANY ONLY	P6071341	ORIFICE TIP #41 DIA	6
	SGM34	FRANCE, GERMANY ONLY	P6071339	ORIFICE TIP #39 DIA	8

E) FRYER CABINET

Modular Cabinet Drawing E1 Parts List E1(A)

ITEM #	PART #	PART DESCRIPTION
1	SEE PARTS LIST E1(B)	BASKET HANGER
2	SEE PARTS LIST E1(B)	CABINET FRONT BOTTOM BRACE
3	A1510902-C	CABINET SIDE LEFT-HAND SG18F
	A1511102-C	CABINET SIDE LEFT-HAND SGC
	A1511202-C	CABINET SIDE LEFT-HAND SG14,SG14R,SG14T,SG18
	A1536102-C	CABINET SIDE LEFT-HAND SGM1824,SGM24,SGM34
4	A1510904-C	CABINET SIDE RIGHT-HAND SG18F
	A1511104-C	CABINET SIDE RIGHT-HAND SGC
	A1511204-C	CABINET SIDE RIGHT-HAND SG14,SG14R,SG14T,SG18
	A1536104-C	CABINET SIDE RIGHT-HAND SGM1824,SGM24,SGM34
5	A1510201-C	CABINET SIDE SUPPORT MODULAR SG14,SG14R,SG14T,SG18
	A1511001-C	CABINET SIDE SUPPORT SG18F
	A1511301-C	CABINET SIDE BRACE SGC
	A1536201-C	CABINET SIDE SUPPORT MODULAR SGM1824,SGM24,SGM34
6	SEE PARTS LIST E1(B)	CABINET BACK TOP
7	SEE PARTS LIST E1(B)	CABINET BACK BOTTOM
8A	A1631101-C	CABINET FRONT SPACER SG18,SG18F,SGM1824
	A1846001-C	CABINET FRONT SPACER SG14,SG14R,SG14T
	A1846801-C	CABINET FRONT SPACER SGC
	A1850501-C	CABINET FRONT SPACER SGM34
	A1850601-C	CABINET FRONT SPACER SGM24
8B	A5069902-C	CABINET UPPER SUPPORT PAN HOLDER SG18F
8C	A5070002-C	CABINET LOWER SUPPORT PAN HOLDER SG18F
9	A1844202-C	CABINET REAR JOINING STRIP TOP REAR SG TO SG
10	A1844202-C	CABINET REAR JOINING STRIP REAR SGC TO SGC
	A1844204-C	CABINET REAR JOINING STRIP BOTTOM REAR SG TO SG
11	A1847002	BRACKET MAGNETIC CATCH
	A1847101-C	CABINET SLAM ACTION DOOR CATCH
	A1848302-C	BRACKET MAGNETIC CATCH SGM24,SGM34
12	A1847602-C	CABINET BOTTOM BRACE JOINING STRIP SGC
13	A1847702-C	CABINET UPPER FRONT JOINING TAB SGC
14	A1907902-C	CABINET CHANNEL JOINING STRIP SG TO SG, SGM TO SGM
	A1907904-C	CABINET CHANNEL JOINING STRIP SGC TO SGC
15	A3526002-C	FLUE REAR HEAT DEFLECTOR SG14*,SG18
16	SEE PARTS LIST E1(B)	FRONT PANEL HEAT SHIELD DEFLECTOR
17	A3671102-C	FRONT PANEL END CAP LH/RH SG*, SGM*
	A3671802-C	FRONT PANEL END CAP LH/RH SG18F
18	SEE PARTS LIST E1(B)	SPLASH BACK
19	A5069802-C	PAN HOLDER UPPER COVER SG18F
20	A6613102-C	FILTER DRAIN LINE CABINET COVER SST
21	SEE PARTS LIST E1(B)	DOOR ASSEMBLY
22	SEE PARTS LIST E1(C)	FRONT PANEL TOP DECK ASSEMBLY
23	B3801801	HINGE WELDMENT LOWER RIGHT HAND SG*
	B3801802	HINGE WELDMENT LOWER LEFT HAND SG*
24	B3802401	HINGE WELDMENT UPPER RIGHT HAND SG*
	B3802402	HINGE WELDMENT UPPER LEFT HAND SG*
25	B5008001-C	PAN HOLDER SHELF WELDMENT SG18F
26	B6663701	FILTER PAN GUIDE LEFT HAND SFD
	B6670701	FILTER PAN GUIDE LEFT HAND SFSG14,SFSG18
	B6670705	FILTER PAN GUIDE LEFT HAND SGM1824
	B6682601	FILTER PAN GUIDE LEFT HAND SGM24,SGM34
27	B6663702	FILTER PAN GUIDE RIGHT HAND SFD
	B6670702	FILTER PAN GUIDE RIGHT HAND SFSG14,SFSG18
	B6670706	FILTER PAN GUIDE RIGHT HAND SGM1824
	B6682602	FILTER PAN GUIDE RIGHT HAND SGM24,SGM34
28	60132001	STUD SPLASH BACK SCREW ON
29	60136401	LATCH SLAM ACTION SG14,SG14R,SG14T,SG18
	PP11006	HANDLE DOOR RECESSED PLASTIC
30	P6071300	MAGNETIC CATCH STANDARD
31	P6071498	HOLE PLUG 1-1/2" CHROME PLATED
32	SEE DRAWING S	FRONT CASTERS/LEGS
33	SEE DRAWING S	REAR CASTERS/LEGS
34	PP10023	SCREW 10-24 X 3/8 SELF TAPPING
35	P0075400	SCREW 10-24 X 1/2 SELF TAPPING
36	P0020600	SCREW 1/4-20 X 5/8 HEX HEAD CAP ZN
37	60118201	BOLT 1/4-20 X 3/8 HEX FLANGE HEAD
38	60125801	SCREW 10-24 X 3/8 TRUSS HEAD SLOTTED LOCKING SST
39	P0093300	NUT HEX (KEP) 10-24 ZN
40 NOT SHOWN	SEE PARTS LIST E1(C)	CABINET ASSEMBLY

Modular Cabinet Drawing E1

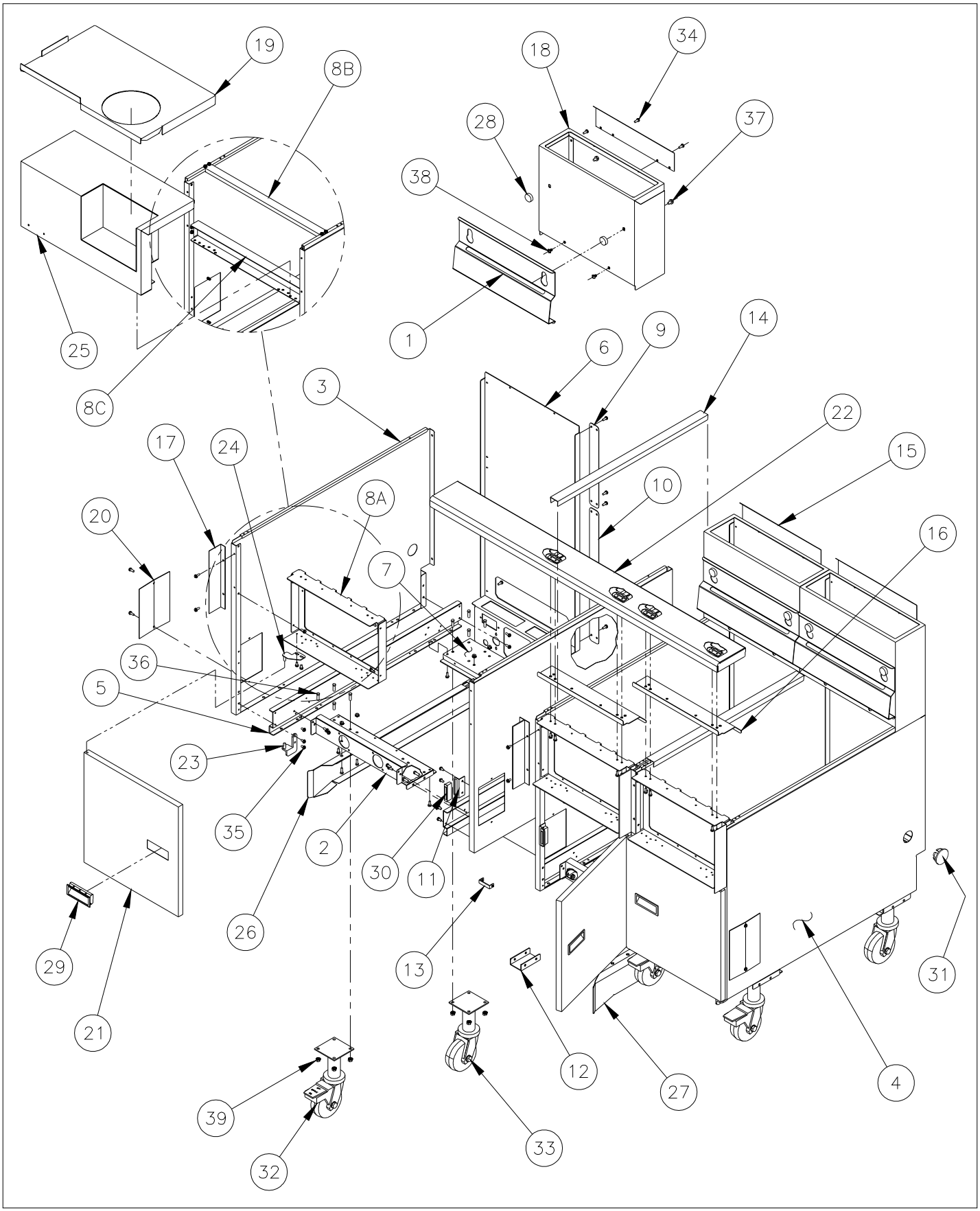

Modular Cabinet Drawing E1 Parts List E1(B)

ITEM #	PART #	PART DESCRIPTION
1	A1105402-C	BASKET HANGER SG14,SG14R,SG14T
	A1105404-C	BASKET HANGER SG18
	A1105406-C	BASKET HANGER EXTENDED SG14,SG14R,SG14T
	A1105408-C	BASKET HANGER EXTENDED SG18
	A1105502-C	BASKET HANGER EXTRA HIGH SG14,SG14R,SG14T
	A1105504-C	BASKET HANGER EXTRA HIGH SG18
	A1105802-C	BASKET HANGER SGC
	A1106502-C	BASKET HANGER SGM1824
	A1106504-C	BASKET HANGER SGM24
	A1106506-C	BASKET HANGER SGM34
2	A1234101-C	CABINET FRONT BOTTOM BRACE SGC
	A1234301-C	CABINET FRONT BOTTOM BRACE SG14,SG14R,SG14T
	A1234401-C	CABINET FRONT BOTTOM BRACE SG18,SG18F
	A1234501-C	CABINET FRONT BOTTOM BRACE SFSG14,SFSG14R,SFSG14T
	A1234601-C	CABINET FRONT BOTTOM BRACE SFSG18
	A1235601-C	CABINET FRONT BOTTOM BRACE SGM34
	A1235701-C	CABINET FRONT BOTTOM BRACE SGM24
	A1235801-C	CABINET FRONT BOTTOM BRACE SGM1824
6	A1631501-C	CABINET BACK TOP SGC TALL FLUE (PRIOR TO 05/2003)
	A1631901-C	CABINET BACK TOP SG14,SG14R,SG14T
	A1631903-C	CABINET BACK TOP SGBNB14 FLAT-TOP
	A1632201-C	CABINET BACK TOP SG18,SG18F
	A1632203-C	CABINET BACK TOP SGBNB18 FLAT-TOP
	A1632901-C	CABINET BACK TOP SGC SHORT FLUE (AFTER 05/2003)
	A1635801-C	CABINET BACK TOP SGM34
	A1635803-C	CABINET BACK TOP SGM24
	A1635805-C	CABINET BACK TOP SGM1824
7	A1631801-C	CABINET BACK BOTTOM SG14,SG14R,SG14T
	A1632101-C	CABINET BACK BOTTOM SG18
	A1632501-C	CABINET BACK BOTTOM SFSG14,SFSG14R,SFSG14T
	A1632601-C	CABINET BACK BOTTOM SFSG18
	A1632701-C	CABINET BACK BOTTOM SG18F
	A1635901-C	CABINET BACK BOTTOM SGM34
	A1636001-C	CABINET BACK BOTTOM SGM24
	A1636101-C	CABINET BACK BOTTOM SGM1824
16	A3667701-C	FRONT PANEL HEAT SHIELD DEFLECTOR SG14,SG14R,SG14T
	A3667703-C	FRONT PANEL HEAT SHIELD DEFLECTOR SG18
	A3672101-C	FRONT PANEL HEAT SHIELD SG18F
	A3676501-C	FRONT PANEL HEAT SHIELD DEFLECTOR SGM1824
	A3676503-C	FRONT PANEL HEAT SHIELD DEFLECTOR SGM24
	A3676505-C	FRONT PANEL HEAT SHIELD DEFLECTOR SGM34
18	A4106902-C	SPLASH BACK SG14,SG14R,SG14T
	A4106904-C	SPLASH BACK SG18,SG18F
	A4106906-C	SPLASH BACK SGBNB14
	A4106908-C	SPLASH BACK SGBNB18
	A4108102-C	SPLASH BACK SGC TALL FLUE (PRIOR TO 05/2003)
	A4108702-C	SPLASH BACK SGC SHORT FLUE
	A4109802-C	SPLASH BACK SGM1824
	A4109804-C	SPLASH BACK SGM24
	A4109806-C	SPLASH BACK SGM34
21	B2304101-C	DOOR ASSEMBLY SG14,SG14R,SG14T
	B2304102-C	DOOR ASSEMBLY SG18,SGM1824
	B2304601-C	DOOR ASSEMBLY SG18F
	B2304603-C	DOOR ASSEMBLY SGC
	B2304610-C	DOOR ASSEMBLY SGM24
	B2304611-C	DOOR ASSEMBLY SGM34
	B2305001-C	DOOR ASSEMBLY SLAM ACTION SG18
	B2305002-C	DOOR ASSEMBLY SLAM ACTION SG14,SG14R,SG14T

Modular Cabinet Drawing E1 Parts List E1(C)

ITEM #	PART #	PART DESCRIPTION
22	B3633605-C	FRONT PANEL TOP DECK WELDMENT SG14,SG14R,SG14T
	B3633606-C	FRONT PANEL TOP DECK WELDMENT SG18
	B3631207-C	FRONT PANEL TOP DECK WELDMENT SGC
	B3631208-C	FRONT PANEL TOP DECK WELDMENT SG18F
	B3633601-C	FRONT PANEL TOP DECK ASSEMBLY SG14-2
	B3633602-C	FRONT PANEL TOP DECK ASSEMBLY SG18-2
	B3633603-C	FRONT PANEL TOP DECK ASSEMBLY SG14/SG18
	B3633604-C	FRONT PANEL TOP DECK ASSEMBLY SG18/SG14
	B3633608-C	FRONT PANEL TOP DECK ASSEMBLY SGM1824
	B3633609-C	FRONT PANEL TOP DECK ASSEMBLY SGM24
	B3633610-C	FRONT PANEL TOP DECK ASSEMBLY SGM34
	B3633611-C	FRONT PANEL TOP DECK ASSEMBLY SGM1824-2
	B3633612-C	FRONT PANEL TOP DECK ASSEMBLY SGM24-2
	B3633613-C	FRONT PANEL TOP DECK ASSEMBLY SGM34-2
	B3633614-C	FRONT PANEL TOP DECK ASSEMBLY SGM1824/SGM24
	B3633615-C	FRONT PANEL TOP DECK ASSEMBLY SGM1824/SGM34
	B3633616-C	FRONT PANEL TOP DECK ASSEMBLY SGM24/SGM34
	B3633617-C	FRONT PANEL TOP DECK ASSEMBLY SGM24/SGM1824
	B3633618-C	FRONT PANEL TOP DECK ASSEMBLY SGM34/SGM1824
	B3633619-C	FRONT PANEL TOP DECK ASSEMBLY SGM34/SGM24
	B3633701-C	FRONT PANEL TOP DECK ASSEMBLY SG14-3
	B3633702-C	FRONT PANEL TOP DECK ASSEMBLY SG14-2/SG18
	B3633703-C	FRONT PANEL TOP DECK ASSEMBLY SG14/SG18/SG14
	B3633704-C	FRONT PANEL TOP DECK ASSEMBLY SG18/SG14-2
	B3633705-C	FRONT PANEL TOP DECK ASSEMBLY SG14/SG18-2
	B3633706-C	FRONT PANEL TOP DECK ASSEMBLY SG18/SG14/SG18
	B3633707-C	FRONT PANEL TOP DECK ASSEMBLY SG18-2/SG14
	B3633708-C	FRONT PANEL TOP DECK ASSEMBLY SG18-3
	B3633709-C	FRONT PANEL TOP DECK ASSEMBLY SGM1824-3
	B3633801-C	FRONT PANEL TOP DECK ASSEMBLY SG14-4
	B3633802-C	FRONT PANEL TOP DECK ASSEMBLY SG14-3/SG18
	B3633803-C	FRONT PANEL TOP DECK ASSEMBLY SG14-2/SG18/SG14
	B3633804-C	FRONT PANEL TOP DECK ASSEMBLY SG14/SG18/SG14-2
	B3633805-C	FRONT PANEL TOP DECK ASSEMBLY SG18/SG14-3
	B3633806-C	FRONT PANEL TOP DECK ASSEMBLY SG14-2/SG18-2
	B3633807-C	FRONT PANEL TOP DECK ASSEMBLY SG14/SG18/SG14/SG18
	B3633808-C	FRONT PANEL TOP DECK ASSEMBLY SG18/SG14-2/SG18
	B3633809-C	FRONT PANEL TOP DECK ASSEMBLY SG14/SG18-2/SG14
	B3633810-C	FRONT PANEL TOP DECK ASSEMBLY SG18/SG14/SG18/SG14
	B3633811-C	FRONT PANEL TOP DECK ASSEMBLY SG18-2/SG14-2
	B3633812-C	FRONT PANEL TOP DECK ASSEMBLY SG18-3/SG14
	B3633813-C	FRONT PANEL TOP DECK ASSEMBLY SG18-2/SG14/SG18
	B3633814-C	FRONT PANEL TOP DECK ASSEMBLY SG18/SG14/SG18-2
	B3633815-C	FRONT PANEL TOP DECK ASSEMBLY SG14/SG18-3
	B3633816-C	FRONT PANEL TOP DECK ASSEMBLY SG18-4
	B3633817-C	FRONT PANEL TOP DECK ASSEMBLY SGM1824-3/SGM34
40 NOT SHOWN (INCLUDES ITEMS: 2-8 & 34)	B1822701-C	CABINET ASSEMBLY MODULAR ALL OPTIONS SG14,SG14R,SG14T
	B1822702-C	CABINET ASSEMBLY MODULAR ALL OPTIONS SG18
	B1822703-C	CABINET ASSEMBLY MODULAR ALL OPTIONS SGBNB14 FLAT-TOP
	B1822704-C	CABINET ASSEMBLY MODULAR ALL OPTIONS SGBNB18 FLAT-TOP
	B1822707-C	CABINET ASSEMBLY MODULAR ALL OPTIONS SGF14,SGF14R,SGF14T
	B1822708-C	CABINET ASSEMBLY MODULAR ALL OPTIONS SGF18
	B1822716-C	CABINET ASSEMBLY MODULAR SGM34
	B1822717-C	CABINET ASSEMBLY MODULAR SGM24
	B1822718-C	CABINET ASSEMBLY MODULAR SGM1824
	B1824401-C	CABINET ASSEMBLY SGC TALL FLUE (PRIOR TO 05/2003)
	B1824402-C	CABINET ASSEMBLY SGC SHORT FLUE
	B1824501-C	CABINET ASSEMBLY SG18F STANDARD
	B1824502-C	CABINET ASSEMBLY SG18F ARTHUR TREACHER'S

Standard Cabinet Drawing E2 Parts List

ITEM #	PART #	PART DESCRIPTION
1	A1512002-C	CABINET SIDE LEFT-HAND SG14,SG14R,SG14T,SG18
2	A1512004-C	CABINET SIDE RIGHT-HAND SG14,SG14R,SG14T,SG18
3	A1635101-C	CABINET BACK SG14,SG14R,SG14T
	A1635103-C	CABINET BACK SG18
4	A1635201-C	CABINET BACK BOTTOM SG14,SG14R,SG14T
	A1635203-C	CABINET BACK BOTTOM SG18
5	A1849601-C	CABINET FRONT SPACER SG14,SG14R,SG14T
	A1849603-C	CABINET FRONT SPACER SG18
6	A1235201-C	CABINET FRONT BOTTOM BRACE SG14,SG14R,SG14T
	A1235203-C	CABINET FRONT BOTTOM BRACE SG18
7	A1105402-C	BASKET HANGER SG14,SG14R,SG14T
	A1105404-C	BASKET HANGER SG18
8	A3526002-C	FLUE REAR HEAT DEFLECTOR SG14*,SG18
9	A4106902-C	SPLASH BACK SG14,SG14R,SG14T
	A4106904-C	SPLASH BACK SG18
10	B2304101-C	DOOR ASSEMBLY SG14,SG14R,SG14T
	B2304102-C	DOOR ASSEMBLY SG18
11	B3630901-C	FRONT PANEL TOP DECK WELDMENT SG14,SG14R,SG14T
	B3630903-C	FRONT PANEL TOP DECK WELDMENT SG18
12	B3632301-C	FRONT PANEL ASSEMBLY SG14,SG14R,SG14T
	B3632302-C	FRONT PANEL ASSEMBLY SG18
13	B3801801	HINGE WELDMENT LOWER RIGHT HAND SG*
14	B3802401	HINGE WELDMENT UPPER RIGHT HAND SG*
15	A1847002	BRACKET MAGNETIC CATCH
16	60132001	STUD SPLASH BACK SCREW ON
17	P6071300	MAGNETIC CATCH STANDARD
18	PP11006	HANDLE DOOR RECESSED PLASTIC
19	SEE DRAWING S	CASTER SWIVEL 9" NON-LOCKING
20	SEE DRAWING S	CASTER SWIVEL 9" LOCKING
N/A	SEE DRAWING S	LEG SET W/HARDWARE 9" (4-PACK)
21	PP10023	SCREW 10-24 X 3/8 SELF TAPPING
22	P0075400	SCREW 10-24 X 1/2 SELF TAPPING
23	P0020600	SCREW 1/4-20 X 5/8 HEX HEAD CAP ZN
24	60125801	SCREW 10-24 X 3/8 TRUSS HEAD SLOTTED LOCKING SST
25	60118201	BOLT 1/4-20 X 3/8 HEX FLANGE HEAD
26	P0093300	NUT HEX (KEP) 10-24 ZN
27 NOT SHOWN (INCLUDES ITEMS: 1-6 & 21)	B1822302-C	CABINET ASSEMBLY STAND ALONE SG14,SG14R,SG14T
	B1822304-C	CABINET ASSEMBLY STAND ALONE SG18

Standard Cabinet Drawing E2

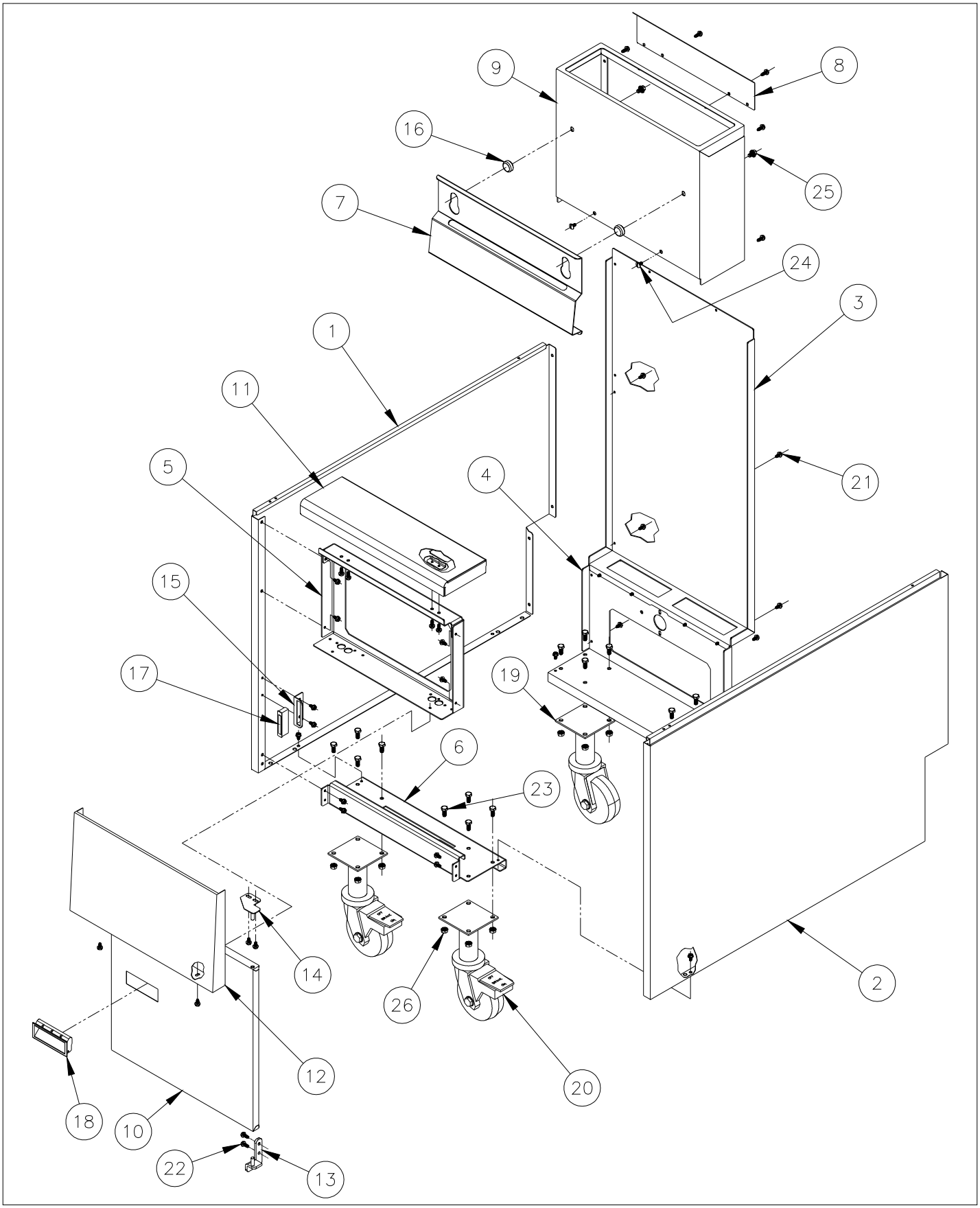

F) ENTRANCE BOX

Entrance Box Drawing F Parts List

ITEM #	PART #	PART DESCRIPTION
1	B6744601	WIRING HARNESS ELECTRONIC IGNITION MODULE RIGHT-HAND SG*
	B6744602	WIRING HARNESS ELECTRONIC IGNITION MODULE LEFT-HAND SG*, SGM*
	B6757601	WIRING HARNESS ELECTRONIC IGNITION MODULE LEFT-HAND CE SG*, SGM*
	B6757602	WIRING HARNESS ELECTRONIC IGNITION MODULE RIGHT-HAND CE SG*
2	B6744901	VOLTAGE SELECTOR SWITCH ASSEMBLY 120/208/220-240V
3	B6748201	WIRING HARNESS ENTRANCE BOX TRANSFORMER (AFTER 08/2000)
	B6745001	WIRING HARNESS ENTRANCE BOX TRANSFORMER (PRIOR TO 08/2000)
4	B6745201	WIRING HARNESS SPINAL TAP LOWER SG*
		(USED PRIOR TO 08/2000)
	B6747101	WIRING HARNESS SPINAL TAP LOWER WITH RELAY BOARD SG*
	B6747102	WIRING HARNESS SPINAL TAP LOWER WIRE-REDUCTION-BOARD SGM*
5	A2957901-C	ENTRANCE BOX IGNITION MODULE BRACKET LEFT-HAND SG*, SGM*
	A2957903-C	ENTRANCE BOX IGNITION MODULE BRACKET RIGHT-HAND SG*
6	A2958102	ENTRANCE BOX SWITCH COVER 120V
	A2958104	ENTRANCE BOX SWITCH COVER 208V
	A2958106	ENTRANCE BOX SWITCH COVER 220/240V
7	A2958401-C	ENTRANCE BOX POWER SUPPLY LEFT-HAND
	A2958403-C	ENTRANCE BOX POWER SUPPLY RIGHT-HAND
8	A2958601-C	ENTRANCE BOX WIRE COVER INNER LEFT-HAND SG*, SGM*
		(NOT USED PRIOR TO 11/2001, REQUIRES NEW ITEM #10 ON PRIOR UNITS)
	A2958603-C	ENTRANCE BOX WIRE COVER INNER RIGHT-HAND SG*
		(NOT USED PRIOR TO 11/2001, REQUIRES NEW ITEM #10 ON PRIOR UNITS)
9	A2958001-C	ENTRANCE BOX SUPPORT BRACKET LEFT-HAND SG*, SGM*
	A2958003-C	ENTRANCE BOX SUPPORT BRACKET RIGHT-HAND SG*
10	A2957801-C	ENTRANCE BOX WIRE COVER OUTER LEFT-HAND SG*, SGM*
	A2957803-C	ENTRANCE BOX WIRE COVER OUTER RIGHT-HAND SG*
11	A2959201-C	ENTRANCE BOX IGNITION MODULE SPLASH SHIELD LEFT-HAND
	A2959203-C	ENTRANCE BOX IGNITION MODULE SPLASH SHIELD RIGHT-HAND
12	60102601	ELECTRONIC IGNITION MODULE 24VAC CE SG*, SGM*
	60108601	CONTROLLER IGNITION SPARK 24VAC 90SEC SG*, SGM*
13	60148401	POWER CONNECTOR INLET & OUTLET IEC-320
		(REPLACES 60130701, REQUIRES NEW ITEM #7 PRIOR TO 6/05)
14	60130401	BUSHING .512 HOLE DIA
15	PP10023	SCREW 10-24 X 3/8 SELF TAPPING
16	PP10429	TRANSFORMER 80VA 120/208/240V TO 24V
17	PP10686	SCREW 6-32 X 1/4 ROUND HEAD PHILLIPS ZN
18	PP10689	SCREW 6-32 X 1/2 ROUND HEAD PHILLIPS ZN
19	P0006300	SCREW 6-32 X 1 ROUND HEAD ZN (USED WITH 60102601 ONLY)
	PP10690	SCREW 6-32 X 1/2 TRUSS HEAD PHILLIPS ZN (USED WITH 60108601 ONLY)
20	PP11337	RECEPTACLE 10A-250V IEC-320 SNAP-IN

Entrance Box Drawing F

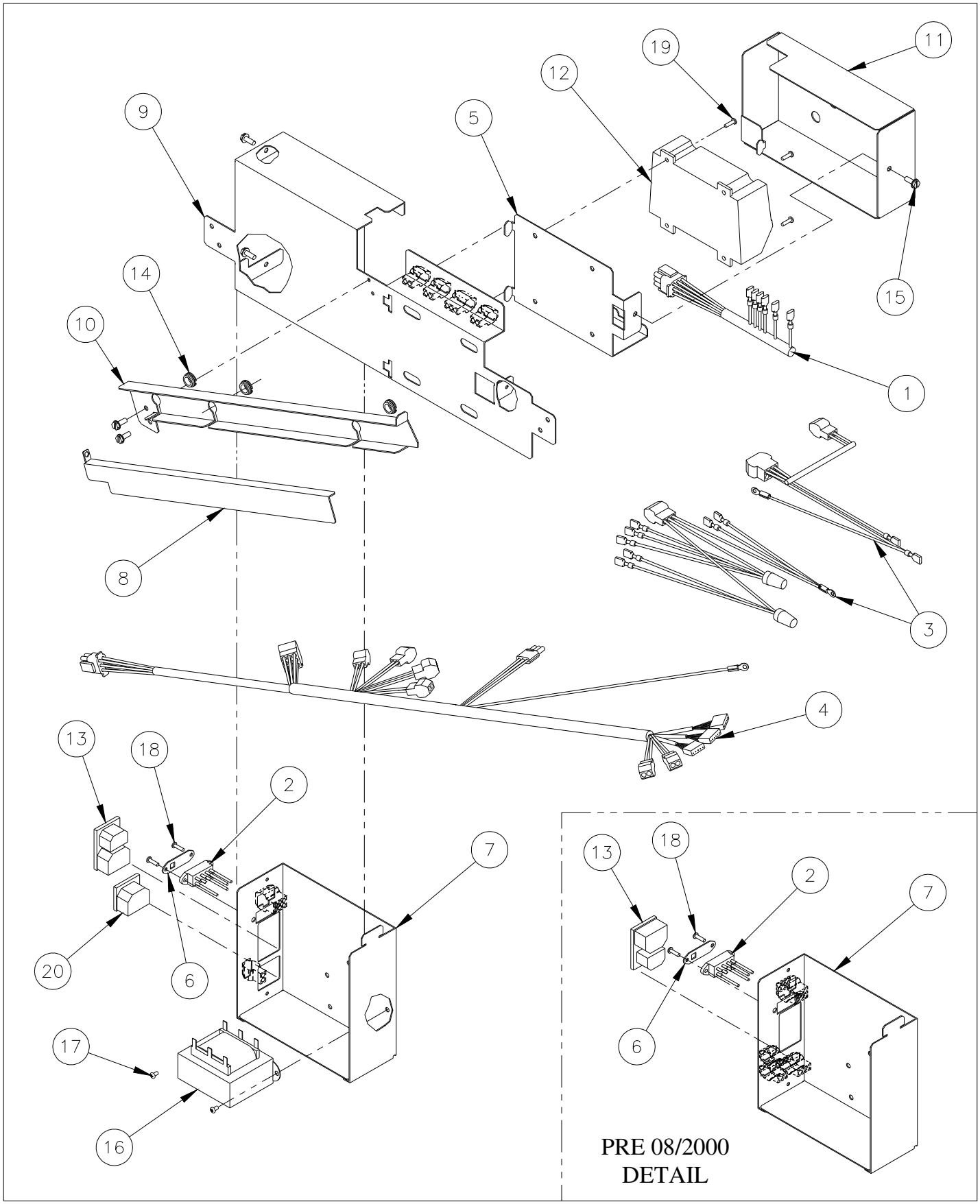

G) CONTROL BOX

Control Box Pre 8/00 Drawing G1 Parts List

ITEM #	PART #	PART DESCRIPTION
1	60130501	STRAIN RELIEF, LAY IN
2	60130601	TERMINAL BLOCK, BARRIER
3	60130602	TERMINAL BLOCK, BARRIER END PLATE
4	60132703	FUSE CERAMIC 2.5A FAST-ACTING 1/4 X 1-1/4
5	A2034201-C	CONTROL BOX, SG14, SG14T, SG14R
	A2034301-C	CONTROL BOX, SG18
6	A2034401-C	CONTROL BOX, HEAT SHIELD SG14, SG14T, SG14R
	A2034501-C	CONTROL BOX, HEAT SHIELD SG18
7	A2034601-C	CONTROL BOX, CABLE RETAINER SG14* WITH BACK-UP T-STAT
	A2034603-C	CONTROL BOX, CABLE RETAINER SG18 WITH BACK-UP T-STAT
8	A2034701-C	CONTROL BOX, CABLE RETAINER SG14* WITHOUT BACK-UP T-STAT
	A2035001-C	CONTROL BOX, CABLE RETAINER SG18 WITHOUT BACK-UP T-STAT
9	A2034801-C	CONTROL BOX, CABLE RETAINER SG14, SG14R
10	A2035102-C	CONTROL BOX, RELAY BRACKET SG*
11	B6746101	WIRING HARNESS, SPINAL TAP UPPER 24V SG*
12	P0005000	SCREW, 6-32 X 3/8 ROUND HEAD PHILLIPS
13	PP10023	SCREW 10-24 X 3/8 SELF TAPPING
14	PP10686	SCREW, 6-32 X 1/4 ROUND HEAD PHILLIPS
15	PP10689	SCREW, 6-32 X 1/2 ROUND HEAD PHILLIPS
16	PP11124	RELAY, 24VDC SPDT WITH MOUNTING TABS
17	P0092300	NUT, 10-24 HEX (KEP)
18	60126601	3300 DIGITAL T-STAT SG14, SG14R, SG18
	60126801	3600 COMPUTER SG14, SG18, SG14R
	60126802	3600 COMPUTER SG14T
	60126701	3300 DIGITAL T-STAT SG14T
19	B3631303-C	FRONT PANEL BEZEL SG14, SG14T,SG14R (COMPUTER CONTROL)
	B3631302-C	FRONT PANEL BEZEL SG18 (COMPUTER CONTROL)
	B3631801-C	FRONT PANEL BEZEL SG14, SG14T, SG14R (BLANK)
	B3631802-C	FRONT PANEL BEZEL SG18 (BLANK)
20	PP10690	SCREW, 6-32 X 1/2 TRUSS HEAD PHILLIPS

Control Box Pre 8/00 Drawing G1

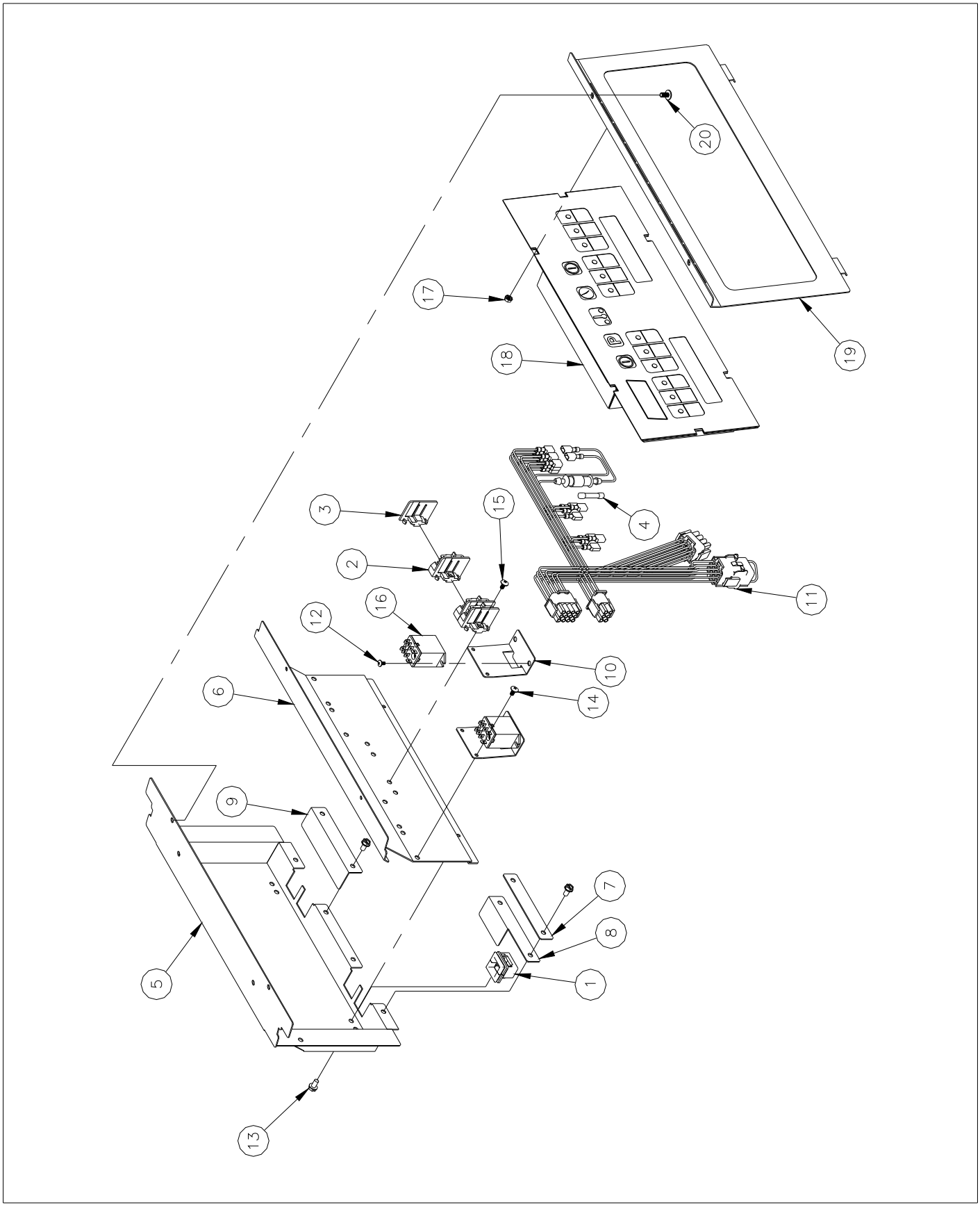

Control Box Post 8/00 Drawing G2 Parts List

ITEM #	PART #	PART DESCRIPTION
1	60130501	STRAIN RELIEF, LAY IN
2	B6747001	WIRING RELAY BOARD NO BACK-UP OPTION
3	B6760501	WIRING HARNESS SCB
4	60132703	FUSE CERAMIC 2.5A FAST-ACTING 1/4 X 1-1/4
5	A2034201-C	CONTROL BOX, SG14, SG14T, SG14R
	A2034301-C	CONTROL BOX, SG18, SGM1824
	A2037301-C	CONTROL BOX, SGM24, SGM34
6	A2035201-C	CONTROL BOX, HEAT SHIELD SG14, SG14T, SG14R
	A2035301-C	CONTROL BOX, HEAT SHIELD SG18, SGM1824
	A2037401-C	CONTROL BOX, HEAT SHIELD SGM24, SGM34
7	A2034601-C	CONTROL BOX, CABLE RETAINER SG14* WITH BACK-UP T-STAT
	A2034603-C	CONTROL BOX, CABLE RETAINER SG18,SGM WITH BACK-UP T-STAT
8	A2034701-C	CONTROL BOX, CABLE RETAINER SG14* WITHOUT BACK-UP T-STAT
	A2035001-C	CONTROL BOX, CABLE RETAINER SG18,SGM WITHOUT BACK-UP T-STAT
9	A2034801-C	CONTROL BOX, CABLE RETAINER SG14, SG14R
10	60132601	RELAY BOARD INSULATION
	60132602	RELAY BOARD INSULATION SCB
11	60127301	RELAY BOARD 24V CLASS 2
	60144001	RELAY BOARD 24V CLASS 2 SCB AND SGM
12	PP10023	SCREW 10-24 X 3/8 SELF TAPPING
13	60066801	SCREW 4-40 X 3/8 ROUND HEAD SLOTTED ZN
14	B6746501	WIRING HARNESS, RELAY BOARD TO CONTROL
15	B6762601	WIRING HARNESS, SCB JUMPER SGM
16	P0092300	NUT, 10-24 HEX (KEP)
17	60126601	3300 DIGITAL T-STAT SG14, SG14R, SG18
	60126801	3600 COMPUTER SG14, SG18, SG14R
	60126802	3600 COMPUTER SG14T
	60126701	3300 DIGITAL T-STAT SG14T
18	B3631303-C	FRONT PANEL BEZEL SG14, SG14T,SG14R (COMPUTER CONTROL)
	B3631302-C	FRONT PANEL BEZEL SG18 (COMPUTER CONTROL)
	B3631307-C	FRONT PANEL BEZEL SGM1824 (COMPUTER CONTROL)
	B3631308-C	FRONT PANEL BEZEL SGM24 (COMPUTER CONTROL)
	B3631309-C	FRONT PANEL BEZEL SGM34 (COMPUTER CONTROL)
	B3631801-C	FRONT PANEL BEZEL SG14, SG14T, SG14R (BLANK)
	B3631802-C	FRONT PANEL BEZEL SG18 (BLANK)
	B3631807-C	FRONT PANEL BEZEL SGM1824 (BLANK)
	B3631808-C	FRONT PANEL BEZEL SGM24 (BLANK)
	B3631809-C	FRONT PANEL BEZEL SGM34 (BLANK)
19	A2037201-C	CONTROL BOX, FRONT PANEL BEZEL SUPPORT SGM24
	A2037203-C	CONTROL BOX, FRONT PANEL BEZEL SUPPORT SGM34
20	PP10690	SCREW, 6-32 X 1/2 TRUSS HEAD PHILLIPS

Control Box Post 8/00 Drawing G2

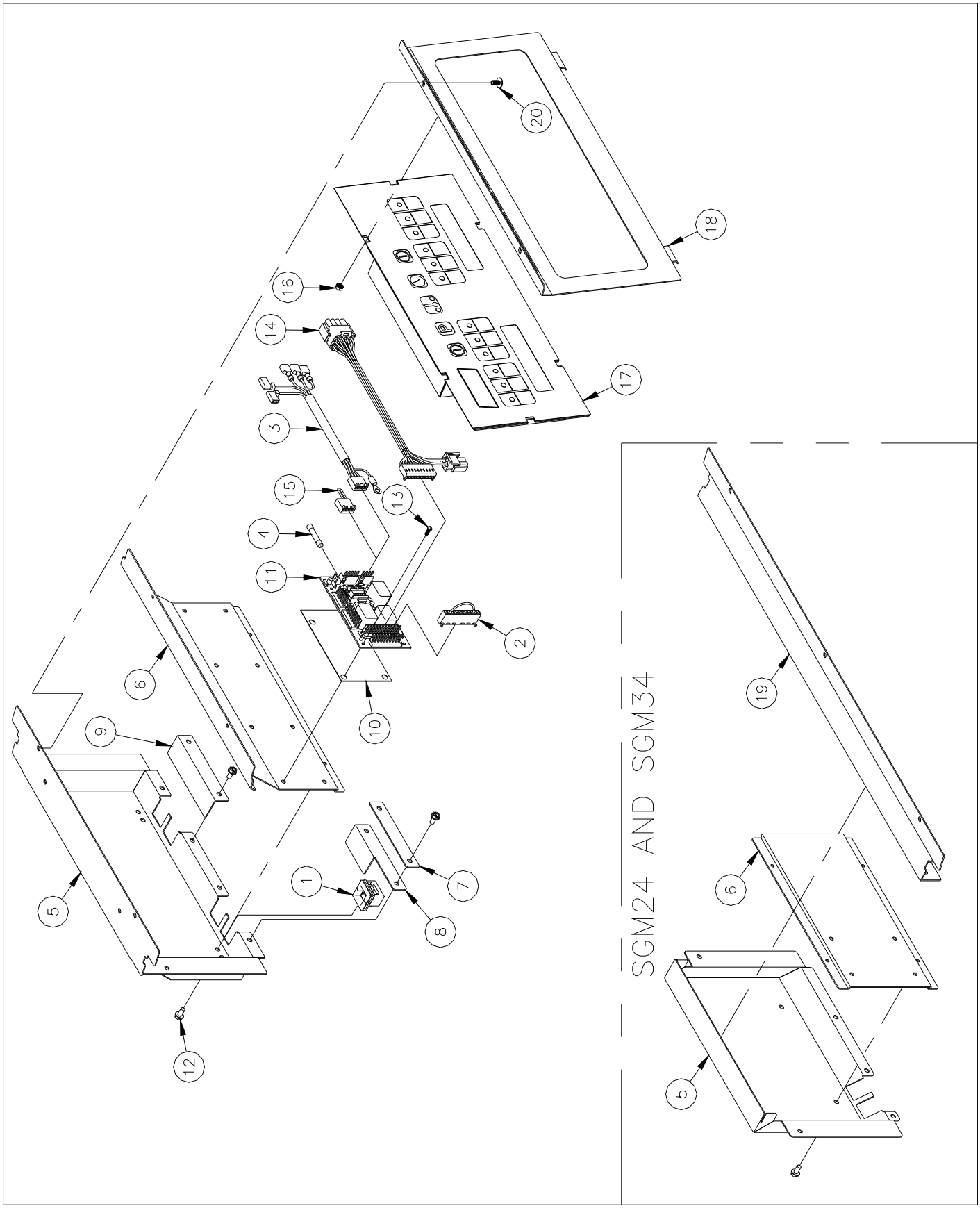

H) SMALL ASSEMBLIES

Small Assemblies Drawing H Parts List

ITEM#	PART#	PART DESCRIPTION
1	PP10084	SWITCH, HI-LIMIT LCM05030
2	A8028601-C	PIPING, BRACKET HI-LIMIT-THERMOSTAT SG MILLIVOLT
3	60125402	THERMOSTAT, RX MILLIVOLT 200-374F
	60125401	THERMOSTAT, RX MILLIVOLT 200-400F
4	P0190700	CLIP, CANOE FASTEX
5	PP10539	KNOB, THERMOSTAT WITH OFF, 200-400F & 100-200C
6	PP10687	SCREW, 6-32 X 313 THRUSS HEAD PHILLIPS ZN
7	P0007300	SCREW, 8-32 X 250 HEX HEAD ZN
8	A8029901-C	PIPING, BRACKET HI-LIMIT SG 24VAC
9	A8033301-C	PIPING, BRACKET HI-LIMIT & THERMOSTAT SGC
10	B6744401	WIRING, MILLIVOLT HI-LIMIT & THERMOSTAT SG
11	B6746701	WIRING, MILLIVOLT THERMOSTAT SG CE
12	B6779850	WIRING, RADIX ASSEMBLY
13	B6745502	WIRING, HI-LIMIT 24VAC SG
14	B2003501	CONTROL BOX, ASSEMBLY SM SG SSTC
15	60126401	CONTROL, SOLID STATE WITH MELT + DVI PRIMARY 24V
	60126301	CONTROL, SOLID STATE WITH MELT + DVI BACKUP 24V
16	60129501	STANDOFF, THREADED MALE TO FEMALE 6-32 UNC X .750
17	P0091100	NUT, HEX KEP 6-32 ZN
18	60001201	GROMMET,.250ID, .500OD, .375GR
19	60129403	KNOB,COLLET WITH CAP + POINTER .250 (REPLACES 60129402)
20	A6084001	LABEL, SOLID STATE CONTROLLER SG
	A6084101	LABEL, SOLID STATE BACKUP CONTROLLER
21	B6746601	WIRING, RELAY BOARD TO BACKUP CONTROL (NOT USED PRIOR TO 8/00)
22	60130501	STRAIN RELIEF, LAY IN
23	B2005301	CONTROL BOX, ASSY SSTC PRIMARY SG (REPLACES B2004201-C)
	B2005302	CONTROL BOX, ASSY SSTC BACKUP SG (REPLACES B2004202-C)
24	B6749401	WIRING, CONTROL REMOTE EXTERNAL (HOOD)
25	B6749301	WIRING, CONTROL REMOTE INTERNAL

Small Assemblies Drawing H

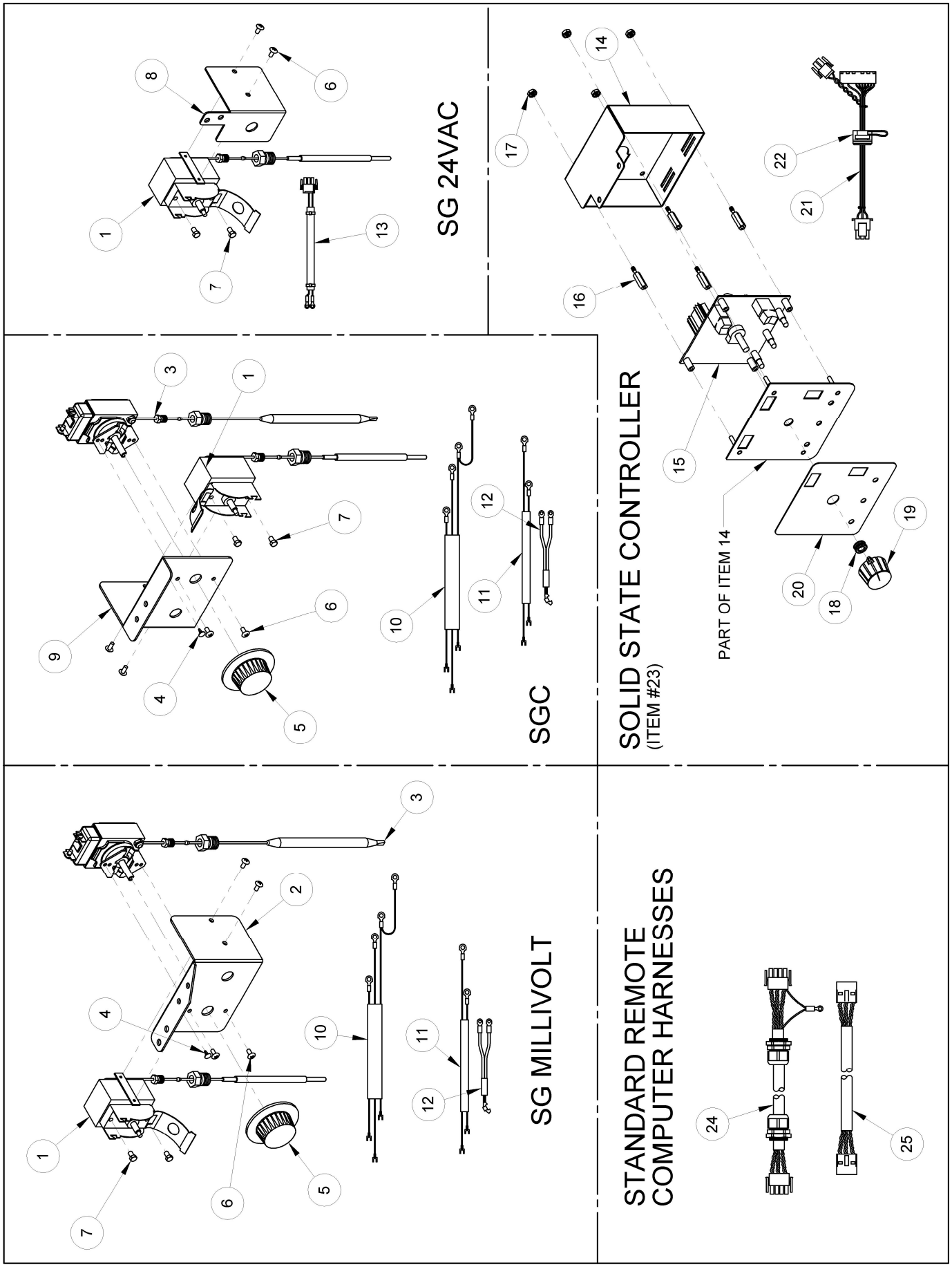

I) DRAIN LINE

Drain Line Drawing I Parts List

ITEM#	PART#	PART DESCRIPTION
1	A7022201	FILTER DRAIN FLANGE
2	A7022101	FILTER DRAIN SEAL FERRULE
3	B6665101	FILTER DRAIN ELBOW
4	60088002	3/8-16 X 1-1/4 SCREW
5A	60068303	TEFLON O-RING, 3" X 3.25 OD (WHITE)
5B	60068302	VITON O-RING (BLACK)
6	B6664701	FILTER DRAIN LINE DOWN SPOUT SG14-14, SG14-18, SG14-14R
	B6664702	FILTER DRAIN LINE DOWN SPOUT SG18-18, SG18-14*
	B6670401	FILTER DRAIN LINE DOWN SPOUT SG14T-14, SG14T-14R
	B6670402	FILTER DRAIN LINE DOWN SPOUT SG14T-18
	B6678303	FILTER DRAIN LINE DOWN SPOUT SGM1824-1824, SGM1824-24, SGM 24-24
	B6678304	FILTER DRAIN LINE DOWN SPOUT SGM1824-34, SGM24-34, SGM34-34
7	60137501	STEEL PLUG, 1/2NPT INTERNAL HEX
8	B6665201	FILTER DRAIN TEE
9	60059302	DRAINLINE GASKET
10	60127702	QUICK RELEASE BAND CLAMP
11	A7022401	DRAIN LINE TUBE SG18-18, SGM1824-1824
	A7022403	DRAIN LINE TUBE SG18-14
	A7022405	DRAIN LINE TUBE SG14-18
	A7022407	DRAIN LINE TUBE SG14-14
	A7022409	DRAIN LINE TUBE SG14T-14, SG14-14T
	A7022411	DRAIN LINE TUBE SG14T-14T
	A7022413	DRAIN LINE TUBE SG14T-18
	A7022415	DRAIN LINE TUBE SG18-14T
	A7022441	DRAIN LINE TUBE SGM1824-24, SGM24-1824
	A7022443	DRAIN LINE TUBE SGM24-24
	A7022445	DRAIN LINE TUBE SGM1824-34, SGM34-1824
	A7022447	DRAIN LINE TUBE SGM34-24, SGM24-34
	A7022449	DRAIN LINE TUBE SGM34-34
12	A7021701	FILTER, NIPPLE ADAPTER
13	B6666701	FILTER DRAIN OUTLET SG14T/14T, SFSG14T
14	B6665301	FILTER DRAIN OUTLET LH
15	B6665401	FILTER DRAIN OUTLET RH SG14/BNB
	B6665402	FILTER DRAIN OUTLET RH SG14T/BNB
	B6665403	FILTER DRAIN OUTLET RH SG18/BNB
16	B6665501	B-N-B DRAIN LINE
17	B6666801	FILTER DRAIN ELBOW SG14T, SGSG14T LH/RH
18	B6666901	FILTER DRAIN TEE SG14T
19	B6671401	FILTER DRAIN FIXED ELBOW SFSG14, SFSG18
20	B6675801	FILTER DRAIN TEE SFSG14, SFSG18
21	B6674401	FILTER DRAIN LINE DOWN SPOUT SFSG14
	B6674001	FILTER DRAIN LINE DOWN SPOUT SFSG18, SFSGM*
22	A7023701-C	FILTER DRAIN OUTLET SUPPORT BRACKET
23	A7023801-C	FILTER DRAIN OUTLET SUPPORT MOUNTING BRACKET INNER
24	A7023901-C	FILTER DRAIN OUTLET SUPPORT MOUNTING BRACKET OUTER
25	P0075400	SCREW, 10-24 X 1/2 SELF TAPPING
26	A7024201-C	FILTER DRAIN LINE SUPPORT SGBNB14
	A7024301-C	FILTER DRAIN LINE SUPPORT SGBNB18
27	P0113300	SCREW, 1/4 - 20 X 3/8
28	PP10668	ACORN NUT, 1/4 - 20
29	P0080650	WASHER, FLAT 1/4
30	P0082700	WASHER, 3/8 SPLIT LOCK
31	PP10177	VINYL SCREW PROTECTION CAP

Drain Line Drawing I

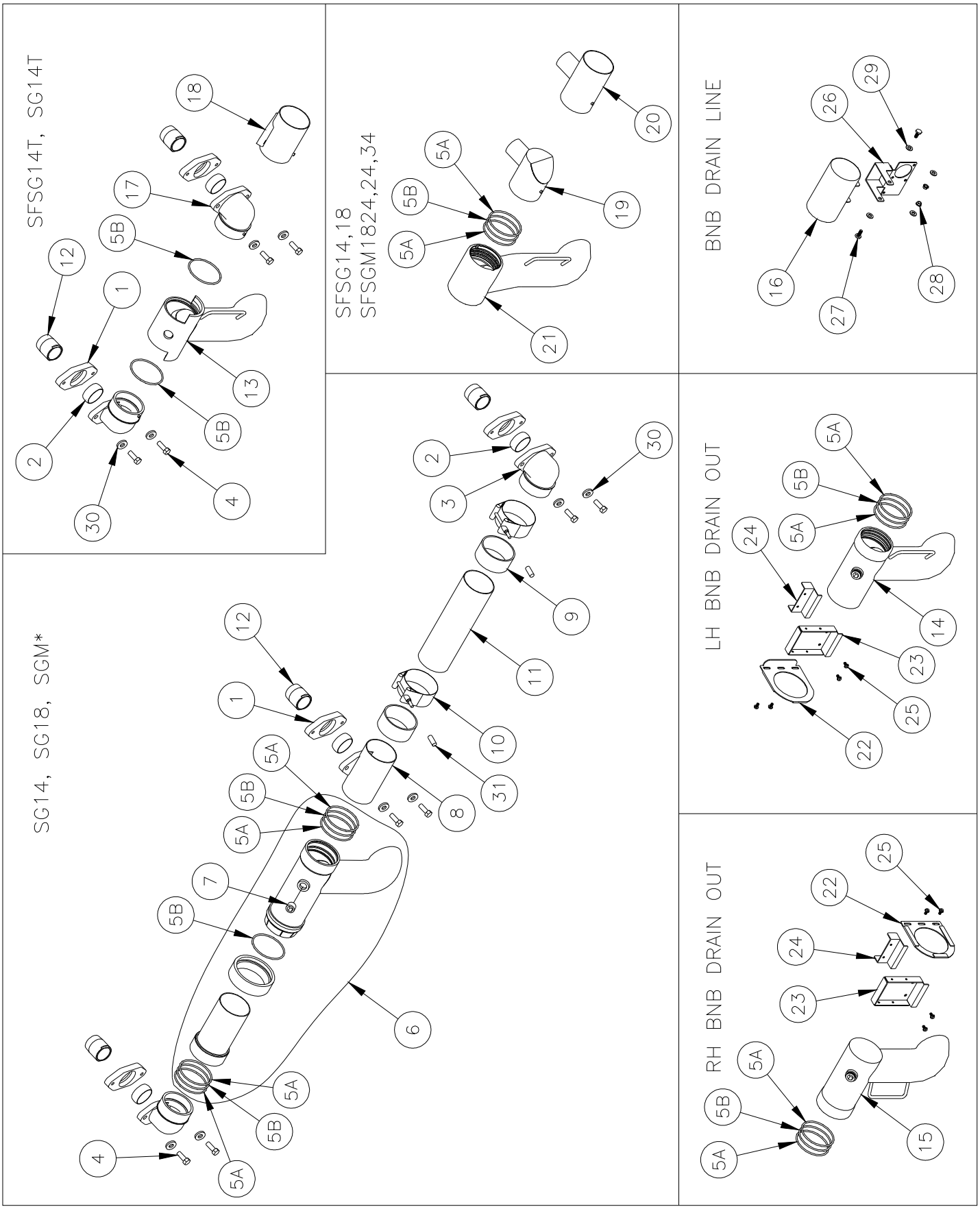

J) FILTER PAN

Filter Pan Drawing J Parts List

ITEM#	PART#	PART DESCRIPTION
1	B6671201	FILTER, STRAINER CAP SFD
2	B6674802	FILTER, PICKUP TUBE SFD
	B6682801	FILTER, PICKUP TUBE SGM*
	B6673901	FILTER, PICKUP TUBE SFSG14
	B6671001	FITLER, PICKUP TUBE SFSG18
3	60068301	O-RING, VITON 1" ID X 1.375" OD
4	B6663901	FILTER, SUPPORT CLIP SFD PAPER
	B6666601	FILTER, SUPPORT CLIP SFD PAPERLESS
	B6671101	FILTER, SUPPORT CLIP SFSG18 PAPER (PRIOR TO 2/10/04)
	B6671102	FILTER, SUPPORT CLIP SFSG14 PAPER
	B6671103	FILTER, SUPPORT CLIP SFSG18, SGM* PAPER (POST 2/10/04)
	B6677401	FILTER, SUPPORT CLIP SFSG*, SGM* PAPERLESS
5	B6664301	FILTER, SUPPORT SFD PAPER
	B6664302	FILTER, SUPPORT SFSG18 PAPER (PRIOR TO 2/10/04)
	B6664303	FILTER, SUPPORT SFSG14 PAPER
	B6664304	FILTER, SUPPORT SFSG18, SGM* PAPER (POST 2/10/04)
	B6664002	FILTER, SUPPORT SFD, SFSG18, SGM* PAPERLESS
	B6664003	FILTER, SUPPORT SFSG14 PAPERLESS
6	B6670802	FILTER, PAN SFSG14
	B6670801	FILTER, PAN SFSG18
	B6674701	FILTER, PAN SFD
	B6674702	FILTER, PAN SFD FOR 36" CABINET (11" LEGS/CASTERS)
	B6682301	FILTER, PAN SGM1824
	B6682401	FILTER, PAN SGM24
	B6682501	FILTER, PAN SGM34
7	60131401	RIGID 2.5" CASTER
8	PP11208	LOCK WASHER #10 SST (SPLIT)
9	P0011300	SCREW, 10-24 X 3/8
10	60136301	EXTERNAL RETAINING RING 1-7/16"
11	B6629701	FILTER, PAPERLESS WIRE MESH ENVELOPE
	B6629703	FILTER, PAPERLESS WIRE MESH ENVELOPE SFSG14*
12	B4004101	FILTER, PAN HANDLE (HARDEES)
13	PP112000	SCREW, 10-24 X 1/2
14	B6671801	FILTER, PICKUP TUBE SFD (PRIOR TO 3/26/04)
15	B6663601	FILTER, PAN SFD (PRIOR TO 3/26/04)

Filter Pan Drawing J

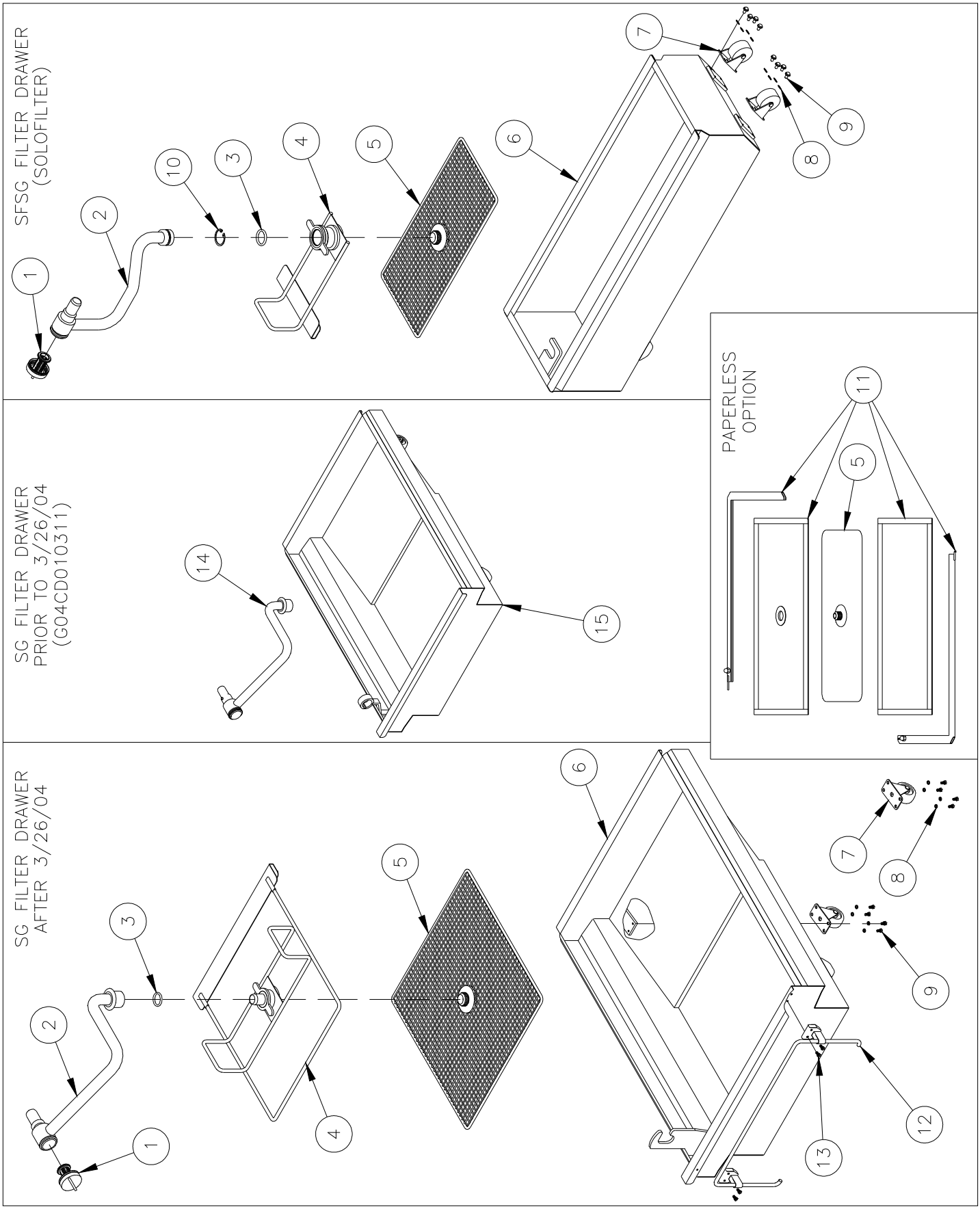

K) WASTE OIL MANAGEMENT

Waste Oil Management Drawing K Parts List

ITEM#	PART#	PART DESCRIPTION
1	B4005201	HANDLE WELDMENT WASTE OIL
2	A7030601-C	VALVE BRACKET REAR HANDLE WELDMENT WASTE OIL
3	P0080750	WASHER FLAT 5/16 ZINC
4	60131901	WASHER SPRING 5/8 WITH 5/16 HOLE
5	P0190200	COTTER PIN 1/16 X 3/4 ZINC
6	A7030302-C	FILTER PAN COVER WASTE OIL
7	A7030701-C	VALVE BRACKET FRONT HANDLE WELDMENT WASTE OIL
8	B5305001	ELECTRICAL ASSEMBLY DVI
9	PP10266	SCREW 4 - 40 X 1/4 ROUND HEAD ZINC
10	A7030501-C	BRACKET WASTE OIL ASSEMBLY TO CABINET
11	P7036013	REDUCER HEX 3/4 X 1/2 NPT BLACK
12	60137601	TEE STEEL 1/2NPT M X M X F
13	P7037678	ELBOW 1/2NPT 90 DEGREE
14	B6746301	WIRING JUMPER 24V
15	60084601	CHECK VALVE 1/2NPT 15GAL/MIN 25PSI MIN
16	P7037094	NIPPLE BLACK 1/2NPT X 2 1/2"
17	P7037096	NIPPLE BLACK 1/2NPT X 3 1/2"
18	60135902	TEFLON HOSE SWIVEL ENDS 19.5"
19	A8033101	TEE 2X 15/16 MALE FLARE X 1/2FNPT
20	60130001	END CAP FITTING 15/16 FLARE
21	A8033801	ELBOW 15/16 FLARE MALE X FEMALE
22	PP10574	BALL VALVE 1/2NPT STAINLESS STEEL
23	P7037100	NIPPLE BLACK 1/2NPT X 5 1/2"
24	A7030401-C	BRACKET WASTE OIL ASSEMBLY SUPPORT TO CABINET
25	PP10023	SCREW 10 - 24 X 3/8 SELF TAPPING
26	60072101	SCREW 10 - 24 X 3/8 ROUND HEAD STAINLESS PHILLIPS
27	PP10263	POXIMITY SWITCH ACTUATOR
28	A6090101	LABEL WASTE OIL FRONT
29	A60191101	LABEL WASTE OIL REAR
30	P0082400	SPLIT LOCK WASHER #10 ZINC
31	60113401	CAP BLACK 3/4NPT
32	A8037201-C	BRACKET PIPING EXTENSION TO CABINET WASTE OIL
33	A8037301-C	BRACKET MANIFOLD REAR WASTE OIL
34	A8037401-C	BRACKET MANIFOLD FRONT WASTE OIL
35	P7036603	COUPLING 3/4NPT CRS
36	60131306	NIPPLE BLACK 3/4NPT X 11"
37	P7036904	UNION BLACK 3/4NPT
38	60131303	NIPPLE BLACK 3/4NPT X 7"
39	P7037358	NIPPLE BLACK 3/4NPT X 3 1/2"
40	P9037679	ELBOW BLACK 3/4NPT
41	P7037359	NIPPLE BLACK 3/4NPT X 4"
42	P0075300	SCREW 10 - 16 X 5/8 HEX SELF DRILLING

Waste Oil Management Drawing K

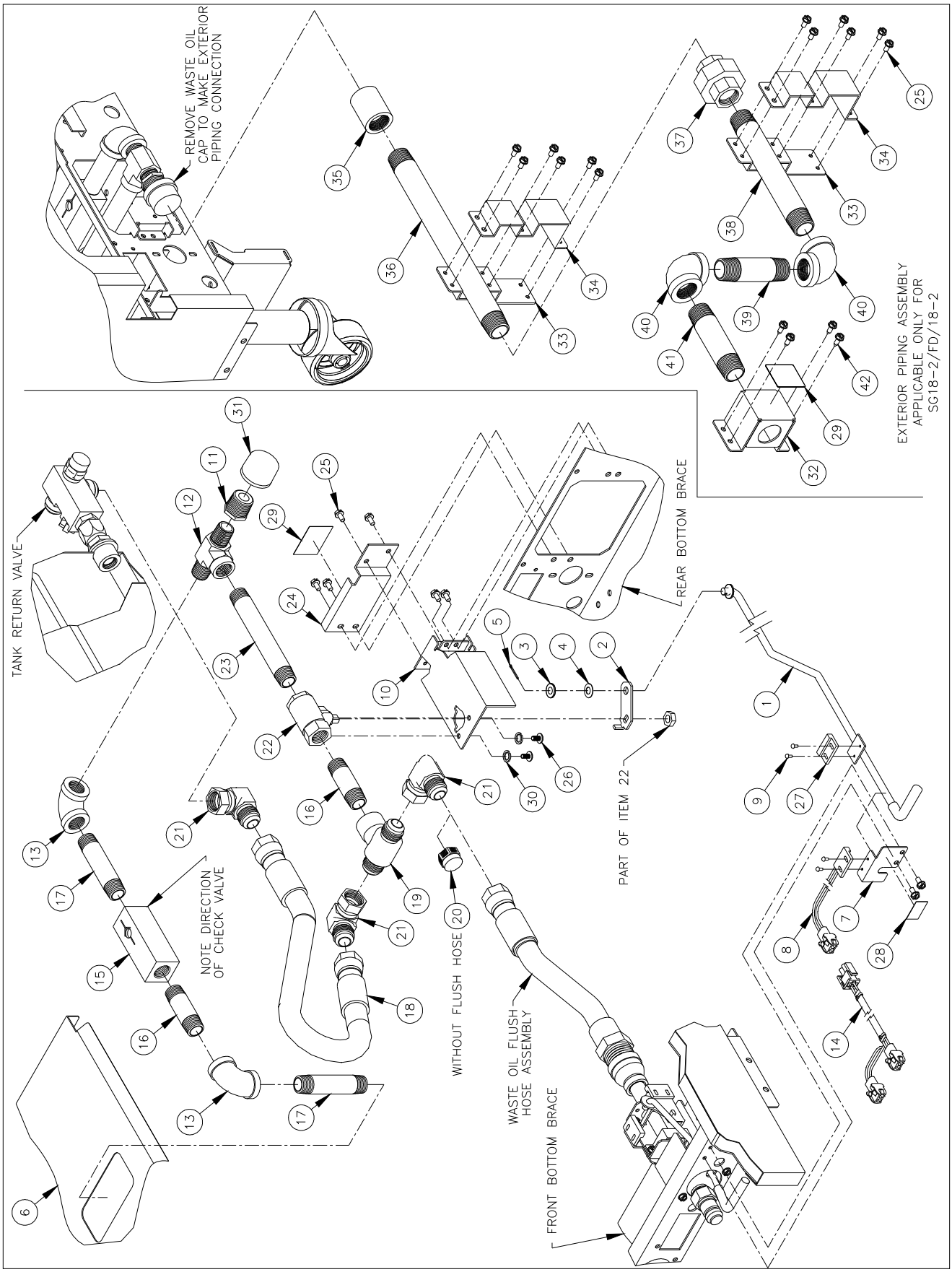

L) PUMP ASSEMBLY

Pump Assembly Pre 3/04 Drawing L1 Parts List

ITEM#	PART#	PART DESCRIPTION
1	60128001	16" FLEX TUBE WITH 15/16 FLARE FITTINGS (PRIOR TO 4/01)
	60132201	TEFLON HOSE W/15/16 FLARE FITTINGS (AFTER 4/01, NOT USED W/ ITEM 6)
2	60134902	SEAL KIT HAIGHT 8GPM
	60134903	SEAL KIT VIKING 8GPM
3	P7037751	STREET ELBOW BLACK IRON 90° 3/4NPT
4	60131302	NIPPLE 3/4NPT X 10.5 BLACK IRON
5A NOT SHOWN	60143501	PUMP ASSEMBLY VIKING 8GPM .3HP 115/230V (50/60HZ)
	60143503	PUMP ASSEMBLY VIKING 8GPM .3HP 208/240V (50/60HZ)
	60143505	PUMP MOTOR ONLY VIKING 8GPM .3HP 115/230V (50/60HZ)
	60143506	PUMP MOTOR ONLY VIKING 8GPM .3HP 208/240V (50/60HZ)
	60143507	PUMP HEAD ONLY VIKING 8GPM (NO MOTOR)
5	B6683203-C	PUMP ASSEMBLY SERVICE 115/230V (VIKING PUMP)
	B6683204-C	PUMP ASSEMBLY SERVICE 208/240V (VIKING PUMP)
	60130803	PUMP MOTOR ONLY HAIGHT 8GPM .3HP 115/220V (50/60HZ)
	60130804	PUMP MOTOR ONLY HAIGHT 8GPM .3HP 240V (50HZ)
	60130805	PUMP HEAD ONLY HAIGHT 8GPM (NO MOTOR)
	60130809	PUMP MOTOR ONLY HAIGHT 8GPM .3HP 208V (50/60HZ)
6	60129901	MALE FLARE FITTING 15/16 X 3/4NPT (NOT USED AFTER 4/01)
7	P9037679	ELBOW BLACK IRON 90° 3/4NPT
8	A6056901	FILTER RESET LABEL
9	A6686802	FILTER RESET PLATE
10	PP10687	SCREW 6 - 32 X 5/16
11	A7020601-C	FILTER RESET BRACKET
12	B6663401	FILTER RESET HANDLE
13	PP10784	ROLL PIN 3/32 DIAMETER X .625
14	P6071632	SPRING .39 ID X .48 OD X 2.00 STAINLESS
15	B6745901	PUMP BOX WIRING HARNESS 120V
	B6746001	PUMP BOX WIRING HARNESS 220/240V
16	60133503	HEATER TAPE 50W 120V 1/2 X 72
	60133504	HEATER TAPE 50W 240/220V 1/2 X 72
	60133508	HEATER TAPE 50W 208V 1/2 X 72
17	P0093300	KEP NUT 1/4 - 20
18	A7020701-C	FILTER PUMP MOUNTING PLATE (SFD)
19	PP11206	SCREW 1/4 - 20 X .75
20	P0080750	WASHER FLAT 5/16
21	A7020801-C	PUMP CONTROL BOX COVER
22	PP10691	SCREW 10 - 24 X .25
23	60130301	TRANSFORMER 5VA (115V)
	60130302	TRANSFORMER 5VA (220-240V)
24	60104701	RELAY DPST 30A 24VAC (220-240V)
	PP11058	RELAY SPST 30A 24VAC (115V)
25	A7021401-C	PUMP CONTROL BOX BODY
26	PP10192	STRAIN RELIEF RIGHT ANGLE
27	60067201	STRAIN RELIEF RIGHT ANGLE 3/4 DIAMETER
28	60077901	CIRCUIT BREAKER ROCKER SPST 10A 250V (115V)
	60078502	CIRCUIT BREAKER ROCKER DPST 5A 250V (220-240V)
29	PP10023	SCREW SELF TAPPING 10 - 24 X .38
30	60131301	NIPPLE 3/4NPT X 9 BLACK IRON
31	A7021202	FILTER PICK UP BLOCK
32	60068301	VITON O-RING 1.00 ID X 1.38 OD
33	A7025401-C	FILTER PUMP RESET BRACKET
34	A7022702-C	FILTER DEFLECTOR OIL PICK UP BLOCK (SFD)
35	PP10693	SCREW 10 -24 X .38
36	P5047670	WIRENUT YELLOW
37	60132701	FUSE CERAMIC .20A TIME DELAY .25 X 1.25
38	P5045508	QUICK DISCONNECT .25 BLUE INSULATED
39 NOT SHOWN (INCLUDES ALL ITEMS EXCEPT 34 & 35)	B6678501-C	FILTER PUMP ASSEMBLY 115V W/O HEAT TAPE (SG)
	B6678503-C	FILTER PUMP ASSEMBLY 230V W/O HEAT TAPE (SG)
	B6678504-C	FILTER PUMP ASSEMBLY 240V W/O HEAT TAPE (SG)
	B6678505-C	FILTER PUMP ASSEMBLY 115V WITH HEAT TAPE (SG)
	B6678507-C	FILTER PUMP ASSEMBLY 230V WITH HEAT TAPE (SG)
	B6678508-C	FILTER PUMP ASSEMBLY 240V WITH HEAT TAPE (SG)

Pump Assembly Pre 3/04 Drawing L1

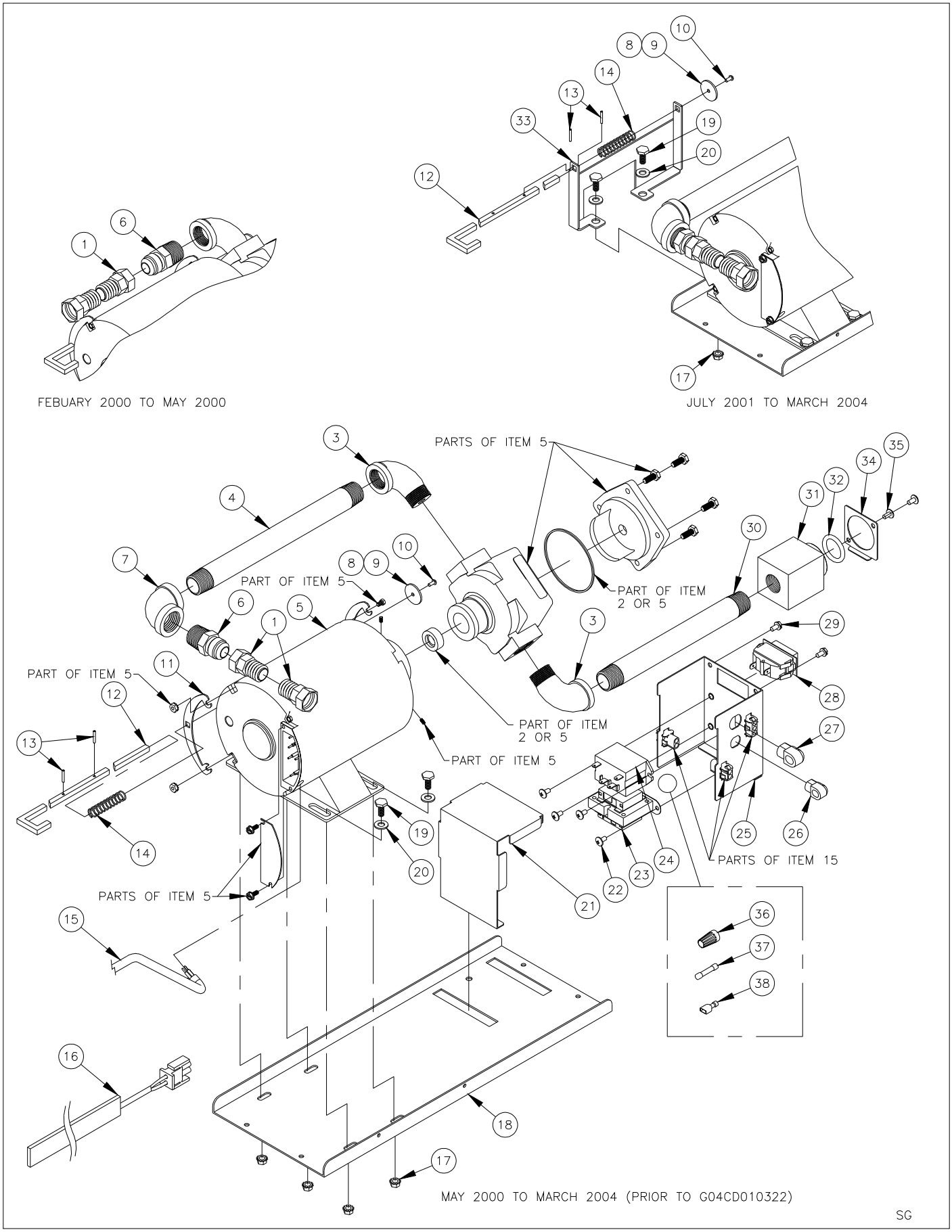

Pump Assembly Post 3/04 Drawing L2 Parts List

ITEM#	PART#	PART DESCRIPTION
1	60132201	TEFLON HOSE 3/4 NPT FEMALE SWIVEL X 3/4 MPT
2	B6677001	FILTER INLET COUPLING
3	60131306	NIPPLE 3/4NPT X 11 BLACK IRON
4	A7029701-C	FILTER PUMP MOUNTING PLATE SFS*
5A	60143501	PUMP ASSEMBLY 8GPM .3HP 115/230V (50/60HZ)
	60143503	PUMP ASSEMBLY 8GPM .3HP 208/240V (50/60HZ)
	60143505	PUMP MOTOR ONLY 8GPM .3HP 115/230V (50/60HZ)
	60143506	PUMP MOTOR ONLY 8GPM .3HP 208/240V (50/60HZ)
	60143507	PUMP HEAD ONLY 8GPM (NO MOTOR)
5B	B6683201-C	PUMP ASSEMBLY SERVICE 115/230V (VIKING PUMP)
	B6683202-C	PUMP ASSEMBLY SERVICE 208/240V (VIKING PUMP)
	60130803	PUMP MOTOR ONLY 8GPM .3HP 115/220V (50/60HZ)
	60130804	PUMP MOTOR ONLY 8GPM .3HP 240V (50HZ)
	60130805	PUMP HEAD ONLY 8GPM (NO MOTOR)
	60130809	PUMP MOTOR ONLY 8GPM .3HP 208V (50/60HZ)
6	P0080750	WASHER 5/16 FLAT
7	PP10828	NUT HEX 5/16 - 18 (KEP)
8	PP11261	BOLT 5/16 X 3/4
9	PP11338	POWER CORD MALE IEC-320 16-3 AWG
10	P9037679	ELBOW BLACK IRON 90° 3/4NPT
11	P7037355	NIPPLE 3/4NPT X 2 BLACK IRON
12	P7037751	STREET ELBOW BLACK IRON 90° 3/4NPT
13	60133505	HEATER TAPE 33W 120V 1/2 X 48
	60133506	HEATER TAPE 33W 240/220V 1/2 X 48
	60133509	HEATER TAPE 33W 208V 1/2 X 48
	60133503	HEATER TAPE 50W 120V 1/2 X 72 (AFTER 3/06)
	60133504	HEATER TAPE 50W 240/220V 1/2 X 72 (AFTER 3/06)
	60133508	HEATER TAPE 50W 208V 1/2 X 72 (AFTER 3/06)
14	A7092201-C	FILTER PIPING CLAMP
15	PP10023	SCREW 10 - 24 X 3/8 SELF TAPPING
16	60134902	SEAL KIT HAIGHT 8GPM
	60134903	SEAL KIT VIKING 8GPM
17	A8033801	ELBOW FEMALE X MALE 15/16 FLARE
18 NOT SHOWN (INCLUDES ALL ITEMS)	B6678501-C	FILTER PUMP ASSEMBLY 115V W/O HEAT TAPE (SG)
	B6678502-C	FILTER PUMP ASSEMBLY 208V W/O HEAT TAPE (SG)
	B6678503-C	FILTER PUMP ASSEMBLY 230V W/O HEAT TAPE (SG)
	B6678504-C	FILTER PUMP ASSEMBLY 240V W/O HEAT TAPE (SG)
	B6678505-C	FILTER PUMP ASSEMBLY 115V WITH HEAT TAPE (SG)
	B6678506-C	FILTER PUMP ASSEMBLY 208V WITH HEAT TAPE (SG)
	B6678507-C	FILTER PUMP ASSEMBLY 230V WITH HEAT TAPE (SG)
	B6678508-C	FILTER PUMP ASSEMBLY 240V WITH HEAT TAPE (SG)

Pump Assembly Post 3/04 Drawing L2

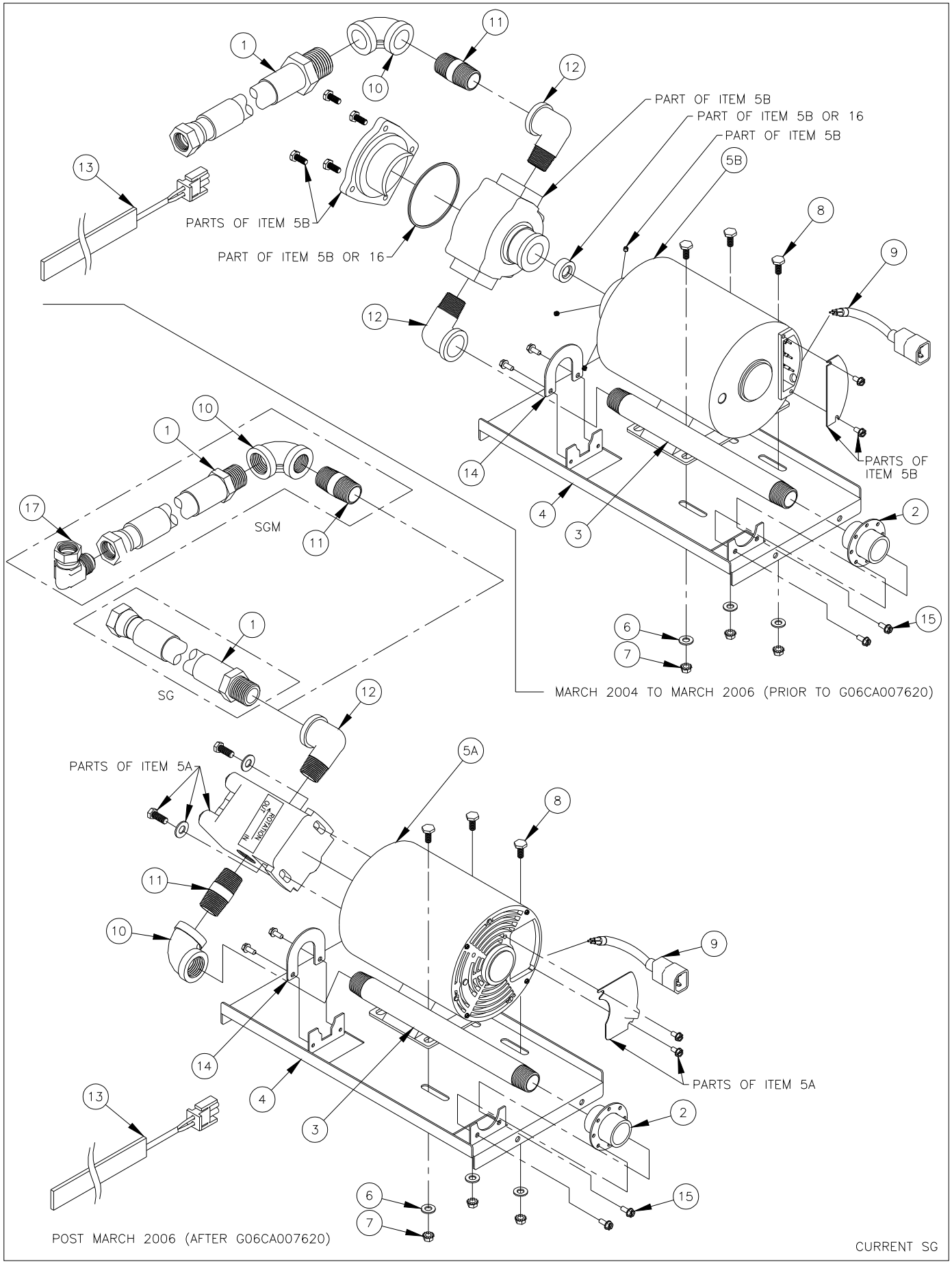

Pump Assembly SFSG Drawing L3 Parts List

ITEM#	PART#	PART DESCRIPTION
1	60132201	TEFLON HOSE 3/4 NPT FEMALE SWIVEL X 3/4 MPT
2	P7036603	COUPLING 3/4NPT (PRIOR TO JANUARY 2004)
	B6677001	FILTER INLET COUPLING
3	60131307	NIPPLE 3/4NPT X 12 BLACK IRON
4	A7028801-C	FILTER PUMP PLATE (PRIOR TO JANUARY 2004)
	A7029201-C	FILTER PUMP MOUNTING PLATE
5A	60143501	PUMP ASSEMBLY 8GPM .3HP 115/230V (50/60HZ)
	60143503	PUMP ASSEMBLY 8GPM .3HP 208/240V (50/60HZ)
	60143505	PUMP MOTOR ONLY 8GPM .3HP 115/230V (50/60HZ)
	60143506	PUMP MOTOR ONLY 8GPM .3HP 208/240V (50/60HZ)
	60143507	PUMP HEAD ONLY 8GPM (NO MOTOR)
5B	B6683201-C	PUMP ASSEMBLY SERVICE 115/230V (VIKING PUMP)
	B6683202-C	PUMP ASSEMBLY SERVICE 208/240V (VIKING PUMP)
	60130803	PUMP MOTOR ONLY 8GPM .3HP 115/220V (50/60HZ)
	60130804	PUMP MOTOR ONLY 8GPM .3HP 240V (50HZ)
	60130805	PUMP HEAD ONLY 8GPM (NO MOTOR)
	60130809	PUMP MOTOR ONLY 8GPM .3HP 208V (50/60HZ)
6	P0080750	WASHER 5/16 FLAT
7	PP10828	NUT HEX 5/16 - 18 (KEP)
8	PP11261	BOLT 5/16 X 3/4
9	PP11338	POWER CORD MALE IEC-320 16-3 AWG
10	P9037679	ELBOW BLACK IRON 90° 3/4NPT
11	P7037355	NIPPLE 3/4NPT X 2 BLACK IRON
12	P7037751	STREET ELBOW BLACK IRON 90° 3/4NPT
13	60133505	HEATER TAPE 33W 120V 1/2 X 48
	60133506	HEATER TAPE 33W 240V 1/2 X 48
	60133509	HEATER TAPE 33W 208V 1/2 X 48
	60133503	HEATER TAPE 50W 120V 1/2 X 72 (AFTER 3/06)
	60133504	HEATER TAPE 50W 240/220V 1/2 X 72 (AFTER 3/06)
	60133508	HEATER TAPE 50W 208V 1/2 X 72 (AFTER 3/06)
14	A7092201-C	FILTER PIPING CLAMP (NOT USED PRIOR TO JANUARY 2004)
15	PP10023	SCREW 10 - 24 X 3/8 SELF TAPPING
16	A8033801	ELBOW FEMALE X MALE 15/16 FLARE
17	60134902	SEAL KIT HAIGHT 8GPM
	60134903	SEAL KIT VIKING 8GPM
18 NOT SHOWN (INCLUDES ALL ITEMS)	B6683101-C	FILTER PUMP ASSEMBLY 115V W/O HEAT TAPE (SG)
	B6683102-C	FILTER PUMP ASSEMBLY 208V W/O HEAT TAPE (SG)
	B6683103-C	FILTER PUMP ASSEMBLY 230V W/O HEAT TAPE (SG)
	B6683104-C	FILTER PUMP ASSEMBLY 240V W/O HEAT TAPE (SG)
	B6683105-C	FILTER PUMP ASSEMBLY 115V WITH HEAT TAPE (SG)
	B6683106-C	FILTER PUMP ASSEMBLY 208V WITH HEAT TAPE (SG)
	B6683107-C	FILTER PUMP ASSEMBLY 230V WITH HEAT TAPE (SG)
	B6683108-C	FILTER PUMP ASSEMBLY 240V WITH HEAT TAPE (SG)

Pump Assembly SFSG Drawing L3

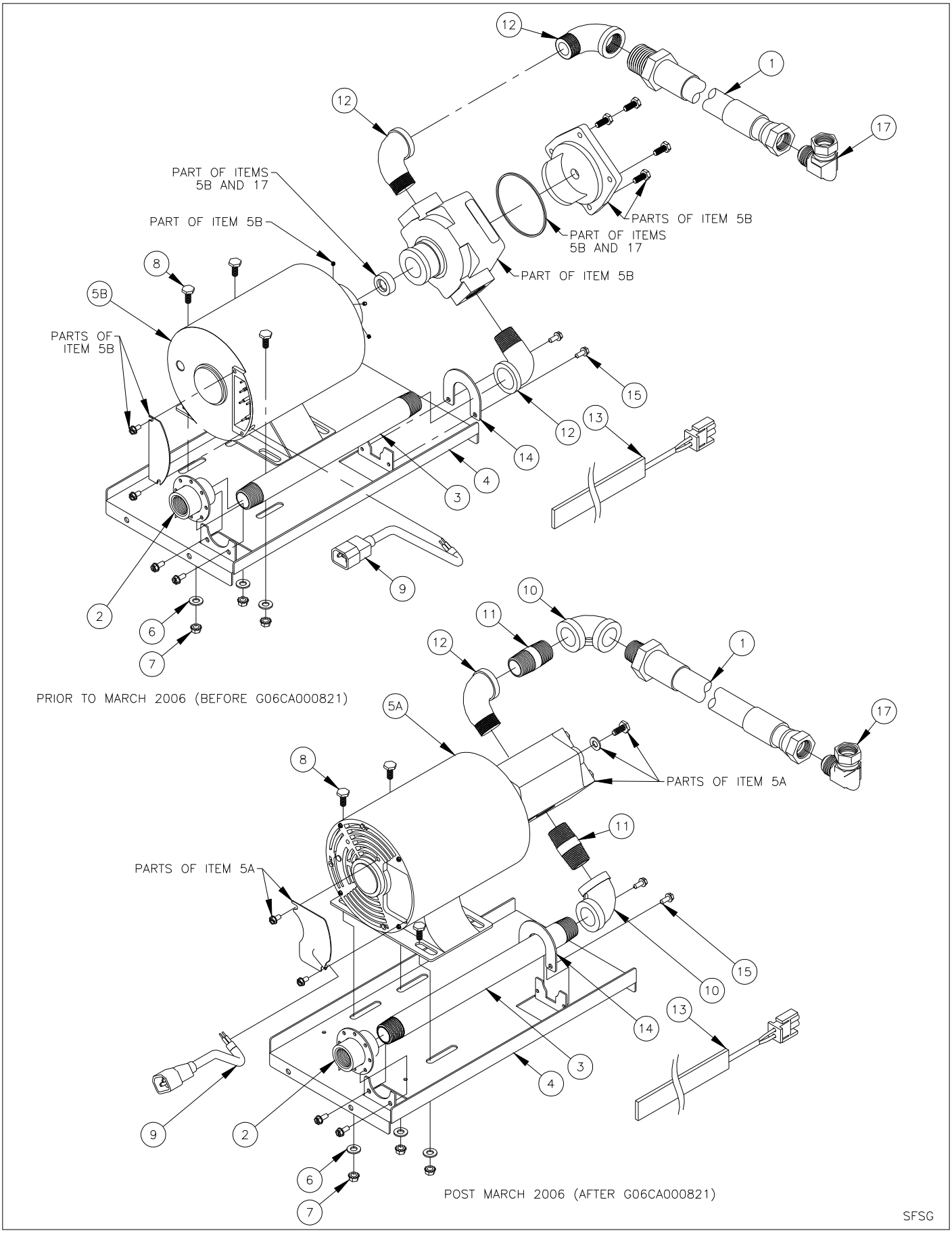

M) PUMP BOX

Pump Box Drawing M Parts List

ITEM#	PART#	PART DESCRIPTION
1	A7028701-C	FILTER PUMP BOX HOUSING
	A7030201-C	FILTER PUMP BOX HOUSING SGM*
2	B6748701	FILTER PUMP BOX WIRING
	B6751601	FILTER PUMP BOX WIRING SGM*
3	60148401	POWER INLET/OUTLET IEC320 (REPLACES 60130701, NEW A7028701-C REQUIRED PRIOR TO 6/05)
4	P0092300	NUT 10 - 24 (KEP)
5	PP11058	RELAY SPST 30A 24VAC (115V)
	60104701	RELAY DPST 30A 24VAC (208/220/240V)
6	PP10693	SCREW 10 - 24 X 3/8
7	60130301	TRANSFORMER 5VA 120V
	60130302	TRANSFORMER 5A 240VAC
	60130303	TRANSFORMER 5VA 208V
8	60077901	CIRCUIT BREAKER, SPST 250V 10A (115V)
	60078502	CIRCUIT BREAKER, DPST 250V 5A (208/220/240V)
9	60132701	FUSE, CERAMIC 0.2A TD .25 X 1.25 (208/220/240V)
10	60128403	M-F JUMPER CORD IEC-320 16-3 AWG X 34" SFSG*
	60128501	CORD NEMA 5-15P / IEC320 16-3 AWG X 96"
11	PP11228	BUTT SPLICE BLUE (115V)
	PP10765	FUSE HOLDER (208/220/240V)
12	A7031903-C	CABLE STRAIN RELIEF AND RETAINER SGM*
13	A1844001-C	CABLE RETAINER
14	60130501	LAY IN STRAIN RELIEF
15	P05045508	INSULATED QUICK DISCONNECT TERMINAL .250 BLUE
16 NOT SHOWN (INCLUDES ALL ITEMS)	B6673006-C	FILTER PUMP CONTROL BOX ASSEMBLY 115V SGM*
	B6673007-C	FILTER PUMP CONTROL BOX ASSEMBLY 220/240V SGM*
	B6675001-C	FILTER PUMP CONTROL BOX ASSEMBLY 115V
	B6675002-C	FILTER PUMP CONTROL BOX ASSEMBLY 208V
	B6675003-C	FILTER PUMP CONTROL BOX ASSEMBLY 220/240V
	B6675004-C	FILTER PUMP CONTROL BOX ASSEMBLY 115V SFSG*
	B6675005-C	FILTER PUMP CONTROL BOX ASSEMBLY 208V SFSG*
	B6675006-C	FILTER PUMP CONTROL BOX ASSEMBLY 220/240V SFSG*

Pump Box Drawing M

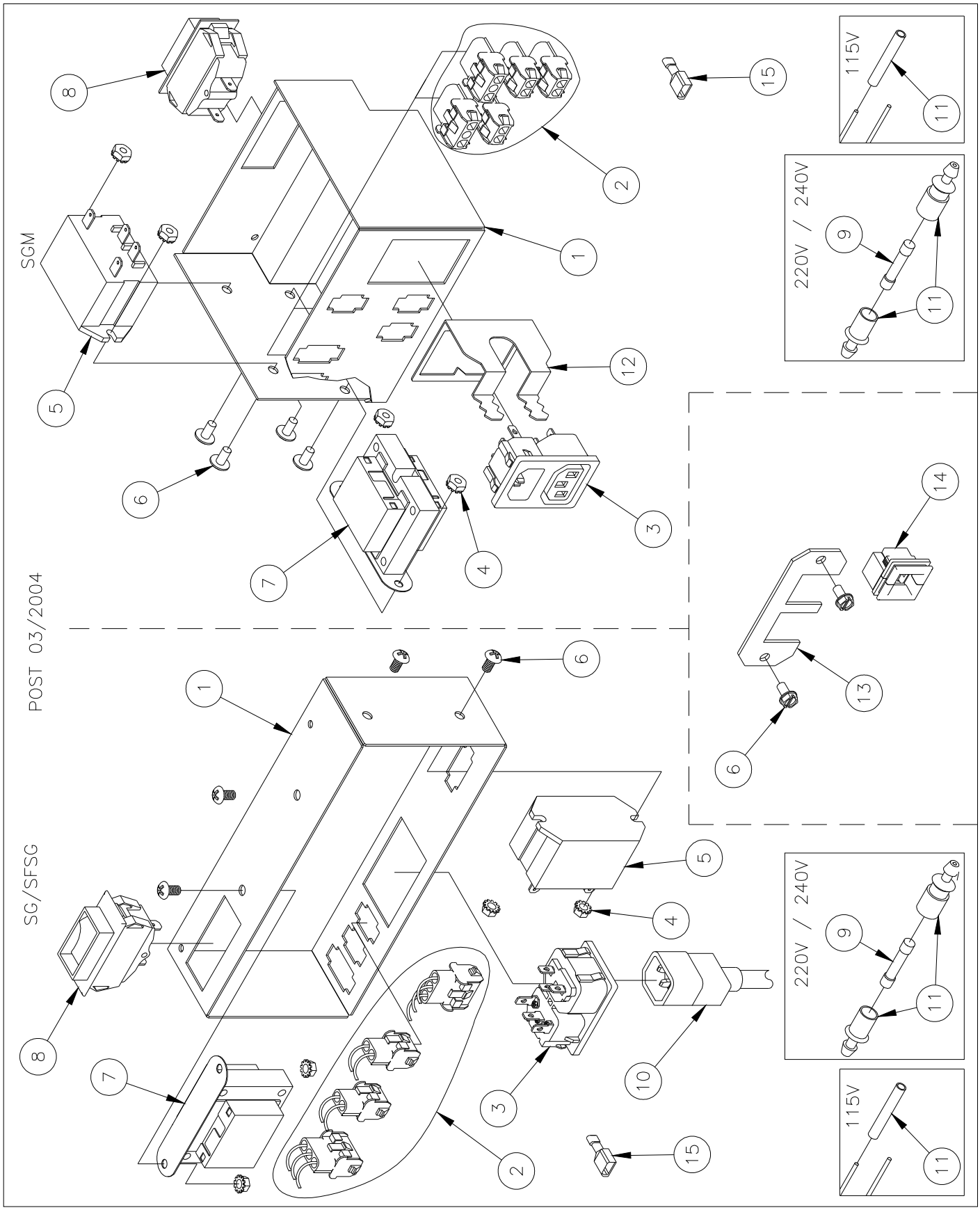

N) RETURN LINE

Return Line Drawing N Parts List

ITEM#	PART#	PART DESCRIPTION
1	PP10263	PROXIMITY ACTUATOR SWITCH
2	A7020501-C	FILTER RETURN HANDLE BRACKET CLAMP
3	A7020301-C	FILTER RETURN HANDLE BRACKET SG14, SG18
	A7020401-C	FILTER RETURN HANDLE BRACKET SG14R
	A7035301-C	FILTER RETURN HANDLE BRACKET SGM34
	A7035305-C	FILTER RETURN HANDLE BRACKET SGM1824, SGM24
4	PP10266	SCREW 4 - 40 X .250
5	B4003701	RETURN HANDLE SG14, SG14R
	B4003702	RETURN HANDLE SG18
	B4004001	RETURN HANDLE SG14T
	B4005901	RETURN HANDLE SGM1824, SGM24, SGM34
6	PP10023	SCREW 10 - 24 X 1/2 SELF TAPPING
7	B5305001	DRAIN VALVE INTERLOCK ASSEMBLY
8	60129802	RETURN VALVE HANDLE SG14T LH
9	P0190200	COTTER PIN 1/16 X 3/4
10	60131801	FILTER RETURN BALL VALVE 3 WAY (W/ SG14, SG18, SG14T RH HANDLE)
11	60130001	RETURN VALVE END CAP
12	A7022801-C	FILTER RETURN BRACKET SGBNB
13	A7022601-C	FILTER RETURN BRACKET FRONT SGBNB
14	60135901	HOSE REINFORCED TEFLON SWIVEL X SWIVEL 14.5 (14-14)
	60135902	HOSE REINFORCED TEFLON SWIVEL X SWIVEL 19.5 (18-18)
	60135903	HOSE REINFORCED TEFLON SWIVEL X SWIVEL 17.5 (18-14)
	60135904	HOSE REINFORCED TEFLON SWIVEL X SWIVEL 15.0 (14-18)
	60128002	FLEXIBLE TUBING WITH FITTINGS 5.00 (INSIDE 14T-14T)
	60128006	FLEXIBLE TUBING WITH FITTINGS 8.50 (14T-14T)
	60128007	FLEXIBLE TUBING WITH FITTINGS 12.50 (14-14T, 14T-14, 14T-18)
	60128008	FLEXIBLE TUBING WITH FITTINGS 15.50 (14-14, 18-14T, 14-18)
	60128009	FLEXIBLE TUBING WITH FITTINGS 19.00 (18-18, 18-14, 14-18, 1824-1824)
	60128010	FLEXIBLE TUBING WITH FITTINGS 22.00 (24-1824, 1824-24)
	60128012	FLEXIBLE TUBING WITH FITTINGS 28.00 (34-1824, 24-24, 1824-34)
	60128013	FLEXIBLE TUBING WITH FITTINGS 34.00 (34-34, 34-24, 24-34)
15	A8033001	RETURN TEE FLARE X FLARE X FLARE SGBNB
16	P0080750	WASHER FLAT 5/16
17	PP10693	SCREW 10 - 24 X 3/8 TH PHILLIPS
18	60133801	VENT TUBE PLUG
19	60128010	FLEXIBLE TUBING WITH FITTINGS 22.00 LH UNIT VENT TUBE
20	60131901	SPRING WASHER 5/8 5/16 HOLE
21	60130101	SWIVEL FITTING NPT TO MPT ADAPTER
22	A7025501-C	RETURN ACTUATOR SWITCH PLATE SG14T
23	A7023101-C	RETURN BRACKET REAR SG14T
24	A7023001-C	RETURN BRACKET FRONT SG14T
25	P6071220	GROMMET 1.25 ID X 1.88 OD
26	B6746301	RETURN HOSE WIRE JUMPER
27	A1844401-C	WIRE CLAMP

Return Line Drawing N

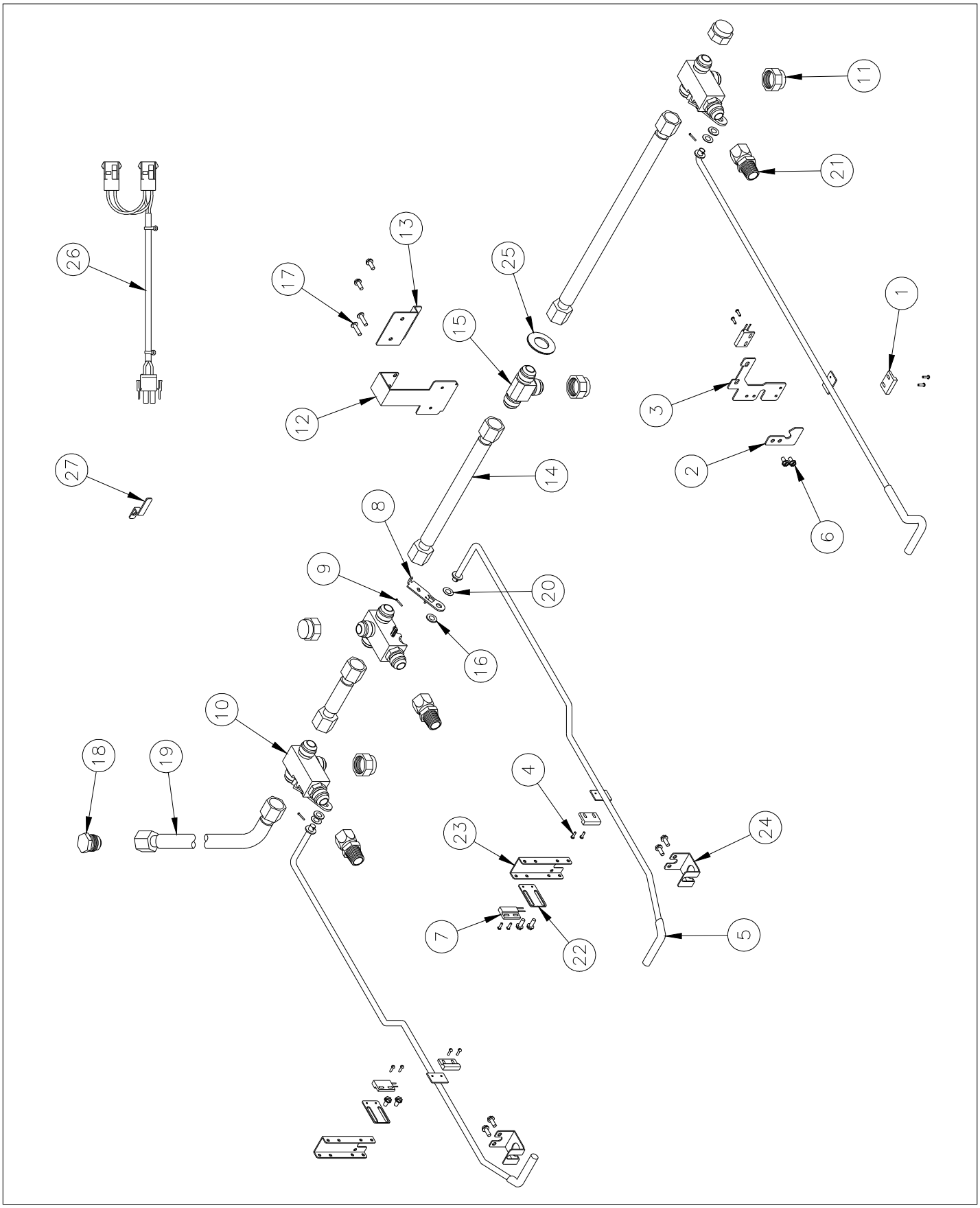

O) FLUSH HOSE ASSEMBLY

Flush Hose Assembly Drawing O Parts List

ITEM#	PART#	PART DESCRIPTION
1	B5305002	DVI ASSEMBLY
2	PP10266	SCREW 4 - 40 X 1/4
3	A5062301-C	FLUSH HOSE OUTER BRACKET
	A5070701-C	FLUSH HOUSE OUTER BRACKET SFSG14, SFSG14T, SGM24
4	PP10741	CONNECTOR PUSH VALVE
5	P7037309	NIPPLE BLACK IRON, 3/8 NPT X 4-1/2
6	P7037327	NIPPLE BLACK IRON, 3/8 NPT X 13-1/2 SG14*, SG18, SGM1824
	P7037321	NIPPLE BLACK IRON, 3/8 NPT X 10-1/2 SFSG14*
	P7037319	NIPPLE BLACK IRON, 3/8 NPT X 9-1/2 SGM24, SGM34
	P7037305	NIPPLE BLACK IRON, 3/8 NPT X 2-1/2 W/ WASTE OIL
7	60136001	REDUCING COUPLING 3/4 NPT X 3/8 NPT
8	60132201	TEFLON HOSE 3/4 MPT FEMALE SWIVEL X 3/4 NPT
	60135902	TEFLON HOSE 19-1/2" 3/4 MPT FEMALE SWIVEL X 3/4 MPT FEMALE SWIVEL (SGM*)
9	A5062401-C	FLUSH HOSE INNER BRACKET
10	P6071780	VALVE, BALL 3/8NPT
11	A5062201-C	FLUSH HOSE VALVE SUPPORT BRACKET
12	P0075400	SCREW 10 - 24 X 1/2 SELF TAPPING
13	60131901	WASHER 5/8 SPRING 5/16 HOLE
14		NUT (PART OF ITEM 10)
15	PP10263	PROXIMITY SWITCH
16	P0190200	COTTER PIN 1/16 X 3/4
17	B5006201	FLUSH HOSE HANDLE
	B5007801	FLUSH HOSE HANDLE SFSG14, SFSG14T, SGM24
18	A5062101-C	FLUSH HOSE VALVE HANDLE
19	60133501	HEATER TAPE 1/2 X 33 (115V)
	60133507	HEATER TAPE 1/2 X 33 (208V)
	60133502	HEATER TAPE 1/2 X 33 (220/240V)
	60133505	HEATER TAPE 1/2 X 48 (115V) SGM24, SGM34
	60133506	HEATER TAPE 1/2 X 48 (208V) SGM24, SGM34
	60133509	HEATER TAPE 1/2 X 48 (220/240V) SGM24, SGM34
20	B6748001	HEAT TAPE WIRING "Y" SPLITTER
21	B6748101	HEAT TAPE WIRING EXTENSION 22"
	B6748102	HEAT TAPE WIRING EXTENSION 40"
	B6748103	HEAT TAPE WIRING EXTENSION 59"
22	P7036600	COUPLING 3/4 NPT (ONLY USED ON SGM34 & SGM24)
23	P7037319	NIPPLE BLACK IRON, 3/8 NPT X 9-1/2 (ONLY USED ON SGM34 & SGM24)
24	60129901	ADAPTER MALE FLARE 45 X MPT (ONLY USED ON SGM*)
25	A8033801	ELBOW FEMALE X MALE 15/16 FLARE (ONLY USED ON UNITS W/O WASTE OIL)
26 NOT SHOWN (INCLUDES ALL ITEMS EXCEPT 20 OR 21)	B5006101-C	FLUSH HOSE ASSEMBLY W/O HEAT TAPE
	B5006102-C	FLUSH HOSE ASSEMBLY W/ HEAT TAPE (115V)
	B5006103-C	FLUSH HOSE ASSEMBLY W/ HEAT TAPE (220/240V)
	B5006108-C	FLUSH HOSE ASSEMBLY W/O HEAT TAPE W/ WASTE OIL
	B5006109-C	FLUSH HOSE ASSEMBLY W/ HEAT TAPE (115V) W/ WASTE OIL
	B5006110-C	FLUSH HOSE ASSEMBLY W/ HEAT TAPE (220/240V) W/ WASTE OIL
	B5006114-C	FLUSH HOSE ASSEMBLY W/O HEAT TAPE SGM1824
	B5006115-C	FLUSH HOSE ASSEMBLY W/ HEAT TAPE (115V) SGM1824
	B5006116-C	FLUSH HOSE ASSEMBLY W/ HEAT TAPE (220/240V) SGM1824
	B5006117-C	FLUSH HOSE ASSEMBLY W/ HEAT TAPE (208V) SGM1824
	B5006118-C	FLUSH HOSE ASSEMBLY W/O HEAT TAPE SGM34
	B5006119-C	FLUSH HOSE ASSEMBLY W/ HEAT TAPE (115V) SGM34
	B5006120-C	FLUSH HOSE ASSEMBLY W/ HEAT TAPE (220/240V) SGM34
	B5006121-C	FLUSH HOSE ASSEMBLY W/ HEAT TAPE (208V) SGM34
	B5007901-C	FLUSH HOSE ASSEMBLY W/O HEAT TAPE SFSG14*
	B5007902-C	FLUSH HOSE ASSEMBLY W/ HEAT TAPE SFSG14* (115V)
	B5007903-C	FLUSH HOSE ASSEMBLY W/ HEAT TAPE SFSG14* (220/240V)
	B5007905-C	FLUSH HOSE ASSEMBLY W/O HEAT TAPE SGM24
	B5007906-C	FLUSH HOSE ASSEMBLY W/ HEAT TAPE (115V) SGM24
	B5007907-C	FLUSH HOSE ASSEMBLY W/ HEAT TAPE (220/240V) SGM24
	B5007908-C	FLUSH HOSE ASSEMBLY W/ HEAT TAPE (208V) SGM24

Flush Hose Assembly Drawing O

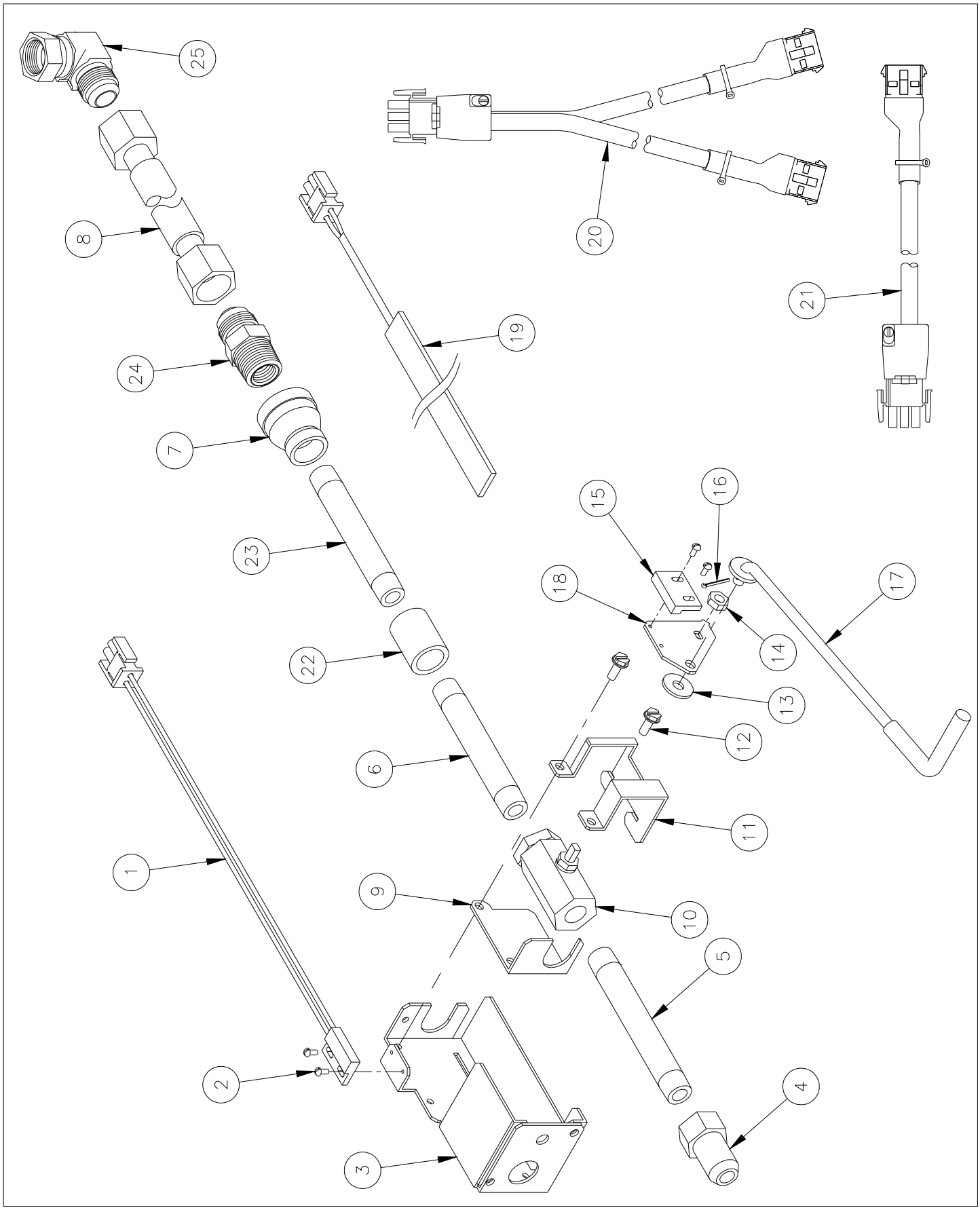

P) FLUSH HOSE (HOSE) ASSEMBLY

Flush Hose (Hose) Assembly Drawing P Parts List

ITEM#	PART#	PART DESCRIPTION
1	B6661002	FILTER RETURN NOZZLE
2	A6653505	FILTER RETURN HOSE
3	PP10689	SCREW 6 - 32 X 1/2
4	A7016401	COUPLING INSULATOR BODY
5	B6660001-C	FILTER DISCONNET INSULATED COUPLING ASSEMBLY
6 NOT SHOWN (INCLUDES ALL ITEMS)	B6623202-C	FILTER FLUSH HOSE ASSEMBLY

Flush Hose (Hose) Assembly Drawing P

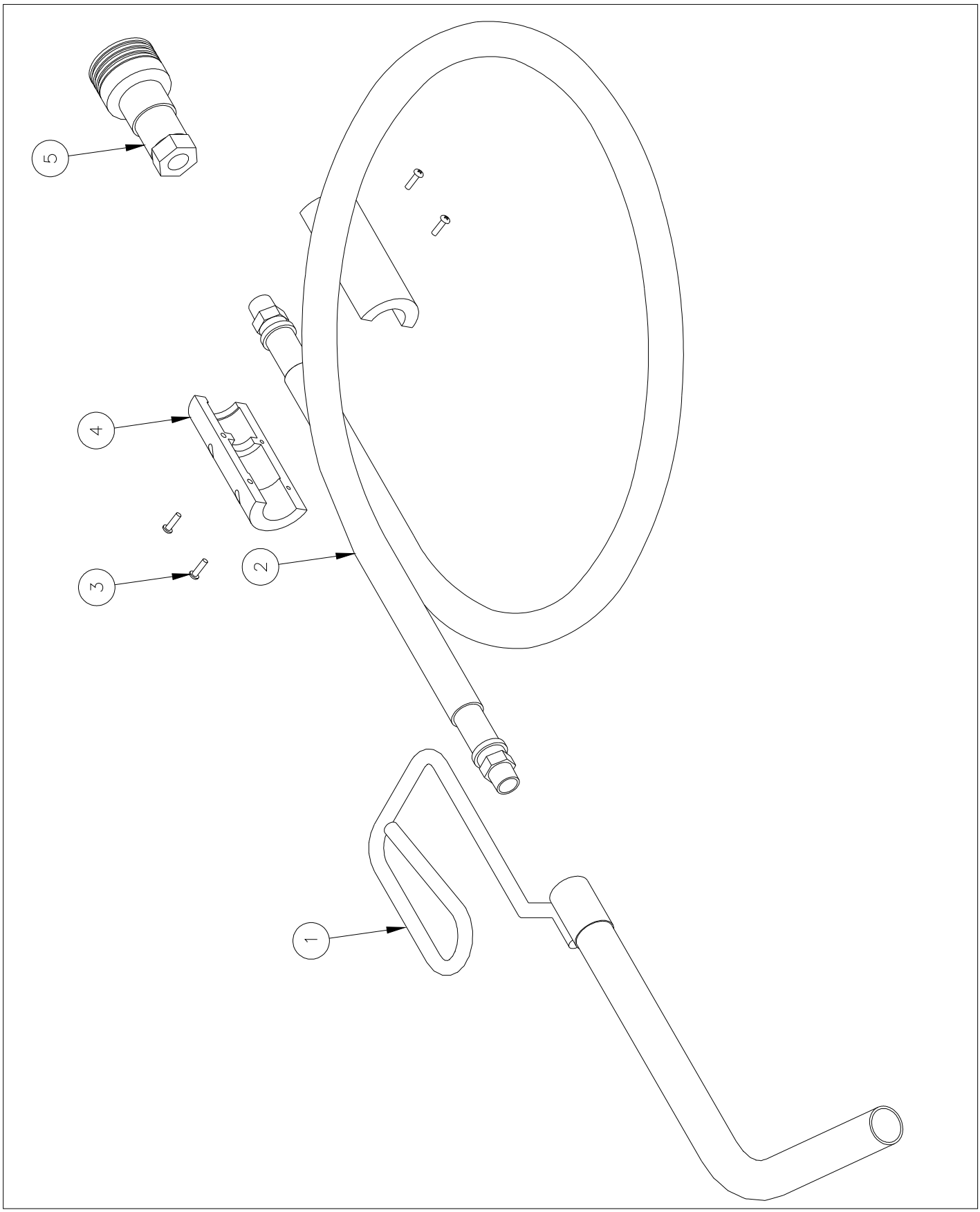

Q) BASKET LIFT

Basket Lift Drawing Q Parts List

ITEM #	PART #	PART DESCRIPTION
1	A5618402	BASKET LIFT MOUNT LEFT-HAND SIDE SG14,SG14R,SG14T
	A5618202	BASKET LIFT MOUNT LEFT-HAND SIDE SG18
2	A5618302	BASKET LIFT MOUNT BOTTOM SG
3	A5618404	BASKET LIFT MOUNT RIGHT-HAND SIDE SG14,SG14R,SG14T
	A5618204	BASKET LIFT MOUNT RIGHT-HAND SIDE SG18
4	PP10023	SCREW 10-24 X 3/8 SELF TAPPING
5	B5606001	BASKET LIFT HANGER WELDMENT HINGED LEFT-HAND SG14,SG14R,SG14T
		(REPLACES B5604201)
	B5606005	BASKET LIFT HANGER WELDMENT HINGED LEFT-HAND SG18
		(REPLACES B5604301)
6	B5606002	BASKET LIFT HANGER WELDMENT HINGED RIGHT-HAND SG14,SG14R,SG14T
		(REPLACES B5604202)
	B5606006	BASKET LIFT HANGER WELDMENT HINGED RIGHT-HAND SG18
		(REPLACES B5604302)
7	A5618502	BASKET LIFT DRIP SHIELD SG
8	PP10668	NUT ACORN W/CENTERLOCK 1/4-20
9	A5617902	BASKET LIFT HANGER SUPPORT AXLE SG
10	A5617801	BASKET LIFT HANGER SUPPORT WHEEL SG
11	A5618002	BASKET LIFT HANGER SUPPORT SG14,SG14R,SG14T
	A5618102	BASKET LIFT HANGER SUPPORT SG18
12	B5604401	BASKET LIFT HANGER SUPPORT ASSY SG14,SG14R,SG14T (INCLUDES 8-11)
	B5604402	BASKET LIFT HANGER SUPPORT ASSY SG18 (INCLUDES 8-11)
13 NOT SHOWN (INCLUDES ALL ITEMS)	B5604501-C	BASKET LIFT HANGER AND MOUNTING KIT SG14,SG14R,SG14T (INCLUDES 1-11)
	B5604502-C	BASKET LIFT HANGER AND MOUNTING KIT SG18 (INCLUDES 1-11)

Basket Lift Drawing Q

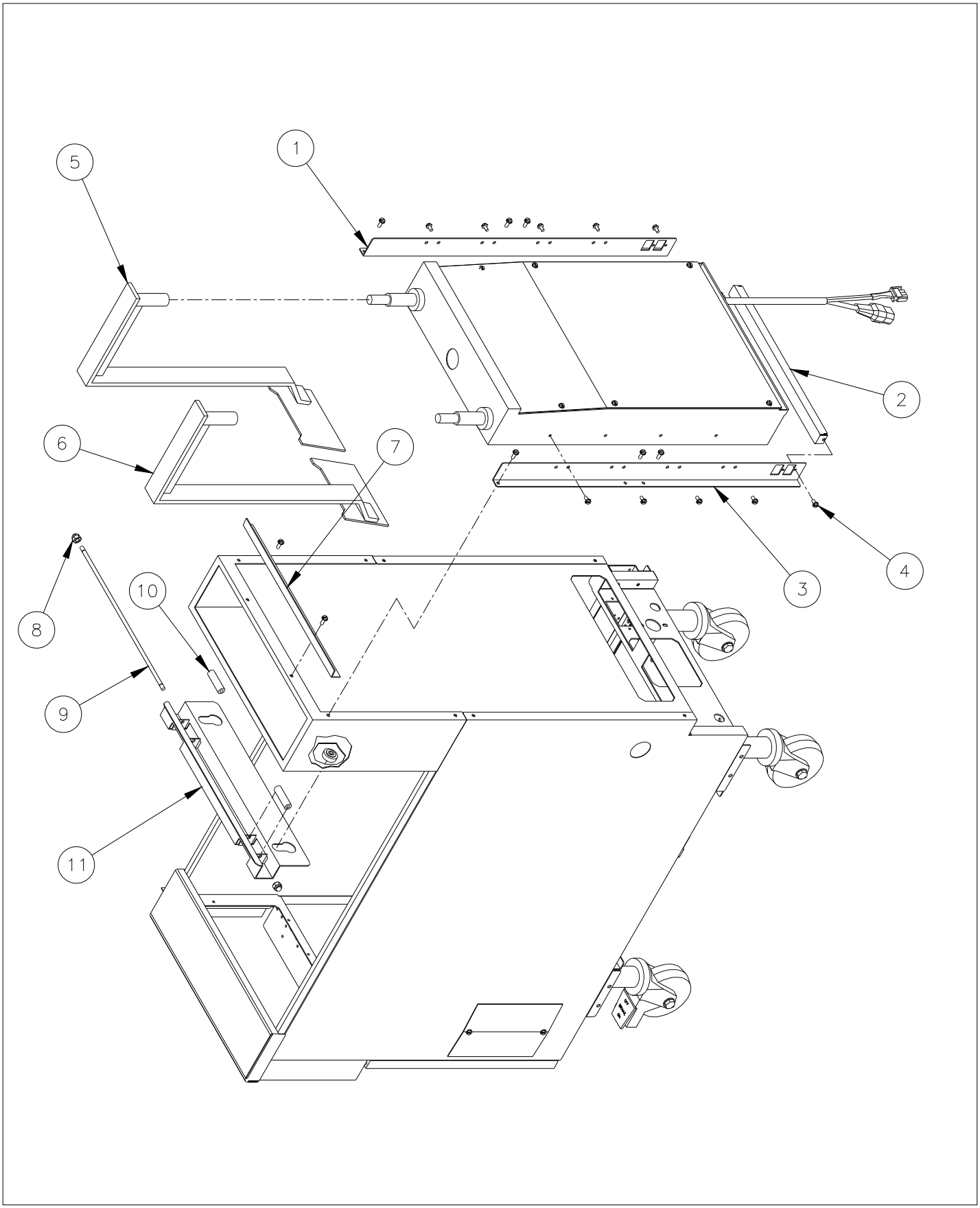

R) BASKET LIFT COMPONENTS

Basket Lift Components Drawing R Parts List

ITEM #	PART #	PART DESCRIPTION
1	B5605601	BASKET LIFT BOX ACTUATOR MODULAR WELDMENT
2	A5619002	BASKET LIFT BOX COVER ACTUATOR MODULAR
3	60134001	CONTROL BASKET LIFT DRIVER BOARD
4	60134301	ACTUATOR 25 3.3-9.4 24VDC 1IPS LEFT-HAND
5	60134302	ACTUATOR 25 3.3-9.4 24VDC 1IPS RIGHT-HAND
6	PP10429-M	TRANSFORMER 80VA 120/208/240V TO 24V
7	A2958102	ENTRANCE BOX SWITCH COVER 120V
	A2958104	ENTRANCE BOX SWITCH COVER 208V
	A2958106	ENTRANCE BOX SWITCH COVER 220/240V
8	B5308901	WIRING BASKET LIFT LIMIT SWITCH ACTUATOR
9	B6744901	WIRING VOLTAGE SELECT 120/208/220-240V
10	B6748901	WIRING HARNESS BASKET LIFT (SG14T)
11	B6779001	WIRING BASKET LIFT MAIN ACTUATOR
12	B6779101	WIRING BASKET LIFT TRANSFORMER ACTUATOR
13	60136901	CLAMP BASKET LIFT LIMIT SWITCH
14	P6071071	CLAMP WIRE 3/8 NYLON
15	PP10673	WASHER LOCK 1/4 SST SPLIT
16	N/A	WASHER FLAT 1/4 SST
17	N/A	HOLE PLUG KEYSTONE #7610 OR EQUIVALENT
18	N/A	SCREW 6-32 X 3/4 PHH PNH SST W/LK WASHER
19	P0075400	SCREW 10-24 X 1/2 SELF TAPPING
20	PP10693	SCREW 10-24 X 3/8 PHH TRH ZN
21	N/A	SCREW 10-24 X 3/8 INDT HEX W/EXT WASHER
22	N/A	SOCKET HEAD CAP SCREW 1/4-20 X 1-1/2 SST
23 NOT SHOWN (INCLUDES ALL ITEMS)	B5604601-C	BASKET LIFT ACTUATOR BOX ALL VOLTAGES (NOT SHOWN)

Basket Lift Components Drawing R

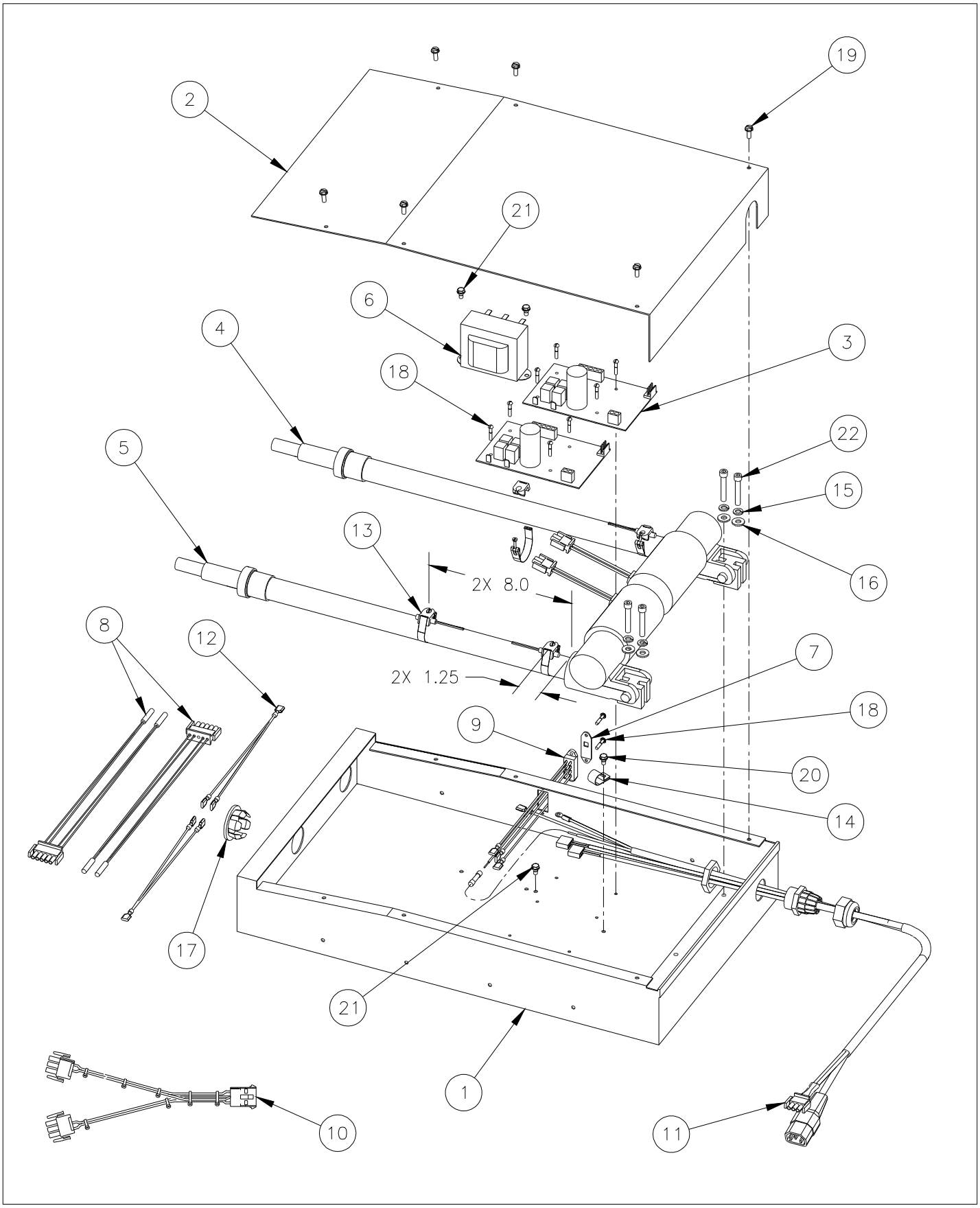

S) ACCESSORIES

Accessories Drawing S Parts List S(A)

ITEM #	PART #	PART DESCRIPTION
1	A3301001	CLEAN-OUT ROD
2	PP10056	CLEANING BRUSH NYLON
3	A2510101	DRAIN EXTENSION
4	B5008101	FRYER CRUMB SCOOP
5	B6681201	FILTER CRUMB SCOOP
6	A7025301	FILTER PAPER 14 X 22 SGM
	PP10613	FILTER PAPER 18.5 X 20.5 SFD, SFSG18
	A6667104	FILTER PAPER 20.5 X 9.92 SFS14, SFSG14R, SFSG14T
7	CONTACT PITCO	FRONT WORKSHELF
8	CONTACT PITCO	SIDE WORKSEHELVE/DRAINBOARD
9	CONTACT PITCO	REAR WORKSHELF
10	CONTACT PITCO	REAR WORKSHELF INSERT
11	CONTACT PITCO	SPLASH GUARD SIDE
12	60132401	9" LEG
	B3900704	9" LEG SET OF 4 WITH HARDWARE
	B3902201	10" LEG ADJUSTABLE SFSG*
	B3902202	11" LEG ADJUSTABLE SGM*
	60115301	9" LEG WITH BOTTOM BOLT FLANGE ADJUSTABLE
	60115302	10" LEG WITH BOTTOM BOLT FLANGE ADJUSTABLE
	60115303	11" LEG WITH BOTTOM BOLT FLANGE ADJUSTABLE
	60140401	4" LEG ADJUSTABLE WITH FLANGED FOOT (SGC ONLY)
13	PP10814	9" CASTER NON-LOCKING
	B3901504	9" CASTER SET OF 4 (2 LOCKING, 2 NON-LOCKING)
	60095001	11" CASTER NON-LOCKING SGM*
	B3902302	9" RIGID CASTER NON-LOCKING
	B3902301	10" RIGID CASTER NON-LOCKING SFSG14*, SFSG18
	B3902305	11" RIGID CASTER NON-LOCKING SFSGM1824
14	PP10815	9" CASTER LOCKING
	60095002	11" CASTER LOCKING SGM*
	B3902304	9" RIGID CASTER LOCKING
	B3902303	10" RIGID CASTER LOCKING SFSG14*, SFSG18
	B3902306	11" RIGID CASTER LOCKING SFSGM1824
15	P6072184	TWIN BASKET SG18
	P6072188	TWIN BASKET FINE MESH SG18
	P6072145	TWIN BASKET SG14, SG14R, SG14T
	P6072146	TWIN BASKET FINE MESH SG14, SG14R, SG14T
	P6072147	TRIPLE BASKET SG14, SG14R
		NOT FOR USE WITH BASKET LIFTS
	P6072185	TRIPLE BASKET SG18
		NOT FOR USE WITH BASKET LIFTS
	P6072143	SQUARE BULK BASKET FRONT HANDLE SG14, SG14R
	P6072144	SQUARE BULK BASKET FINE MESH FRONT HANDLE SG14, SG14R
	P6072181	SQUARE BULK BASKET FRONT HANDLE SG18
	P6072180	SQUARE BULK BASKET SIDE HANDLES SG18
	A4514701	SMALL BASKET SGM*
	A4514702	LARGE BASKET SGM*
16	SEE PARTS LIST S(B)	TUBE RACK
17	SEE PARTS LIST S(B)	CABINET BACK
18	SEE PARTS LIST S(B)	TANK COVER ASSEMBLY
19	B5007501-C	OUTLET BOX ASSEMBLY 125V 15A
20	SEE PARTS LIST S(B)	FILTER CRUMB CATCH BASKET
21	A3340601-C	TANK BACK STANDOFF SG14
22	SEE PARTS LIST S(B)	FLUE EXTENSION WELDMENT
23	SEE PARTS LIST S(B)	GAS HOSE QUICK DISCONNECT WITH VALVE

Accessories Drawing S

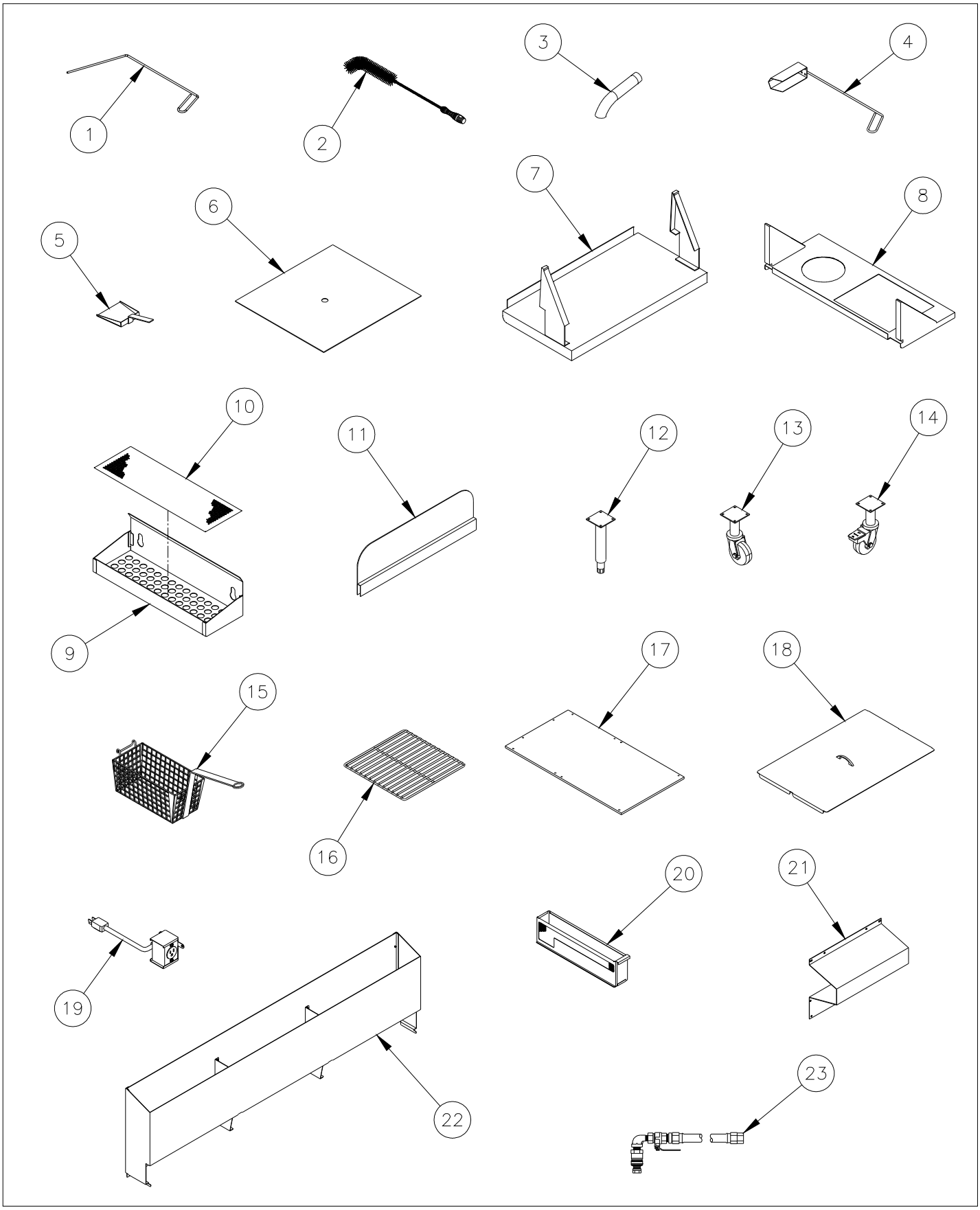

Accessories Drawing S Parts List S(B)

ITEM #	PART #	PART DESCRIPTION
16	P6073148	TUBE RACK SG14, SG14R
	B4511801	TUBE RACK SG14T
	A4500201	TUBE SCREEN SG14, SG14R, SFSG14
	B4511901	TUBE RACK SG18
	P6072186	TUBE SCREEN SG18
	P6072342	TUBE SCREEN SGM34
	A4514601	TUBE SCREEN SGM1824
	P6072404	TUBE SCREEN SGM24
	B7425301-C	FISH GRID SG14
	B7425401-C	FISH GRID SG18
17	A1842302-C	CABINET BACK SKIN STANDARD SG14, SG14R, SG14T
	A1842304-C	CABINET BACK SKIN STANDARD SG18
	A1842306-C	CABINET BACK SKIN MODULAR SG14, SG14R, SG14T
	A1842308-C	CABINET BACK SKIN MODULAR SG18
	A1842316-C	CABINET BACK SKIN FLAT-TOP SGBNB14
	A1842318-C	CABINET BACK SKIN FLAT-TOP SG18
	A1842320-C	CABINET BACK SKIN SHORT FLUE SGC (BEFORE 5/03)
	A1842322-C	CABINET BACK SKIN TALL FLUE SGC
18	B2101501-C	TANK COVER ASSEMBLY SG14, SG14R, SG14T
	B2101502-C	TANK COVER ASSEMBLY SG18
	B2101504-C	TANK COVER ASSEMBLY SGC
	B2101512-C	TANK COVER ASSEMBLY SGM24
	B2101513-C	TANK COVER ASSEMBLY SGM34
	B2101603-C	TANK COVER ASSEMBLY BASKET-LIFT SG14, SG14R, SG14T
	B2101604-C	TANK COVER ASSEMBLY BASKET-LIFT SG18
20	B5006901	FILTER CRUMB CATCH BASKET SFD
	B6674101	FILTER CRUMB CATCH BASKET SFSG18
22	B3505001-C	FLUE EXTENSION WELDMENT SG18-3
	B3505002-C	FLUE EXTENSION WELDMENT SG18-2
	B3505003-C	FLUE EXTENSION WELDMENT SG18
	B3505004-C	FLUE EXTENSION WELDMENT SG14-3
	B3505005-C	FLUE EXTENSION WELDMENT SG14-2
	B3505006-C	FLUE EXTENSION WELDMENT SG14
23	B8003102	GAS HOSE QUICK DISCONNECT WITH VALVE 3/4 NPT X 36"
	B8003103	GAS HOSE QUICK DISCONNECT WITH VALVE 3/4 NPT X 48"
	B8003105	GAS HOSE QUICK DISCONNECT WITH VALVE 1 NPT X 36"
	B8003106	GAS HOSE QUICK DISCONNECT WITH VALVE 1 NPT X 48"
	B8003108	GAS HOSE QUICK DISCONNECT WITH VALVE 1-1/4 NPT X 36"
	B8003109	GAS HOSE QUICK DISCONNECT WITH VALVE 1-1/4 NPT X 48"

This Page Left Intentionally Blank

T) BNB

BNB Drawing T Parts List

ITEM #	PART #	PART DESCRIPTION
1	A5824202-C	SCOOPED PAN LINER SGBNB14
	A5825304-C	SCOOPED PAN LINER SGBNB14 DIVIDED
	A5824204-C	SCOOPED PAN LINER SGBNB18
	A5825302-C	SCOOPED PAN LINER SGBNB18 DIVIDED
2	A5824101-C	BNB BOTTOM SHELF SGBNB14
	A5824103-C	BNB BOTTOM SHELF SGBNB18
3	PP10907	FOODWARMER, BUILT-IN 115V
	PP10908	FOODWARMER, BUILT-IN 208V
	PP10909	FOODWARMER, BUILT-IN 240V
	P5044760	FOODWARMER, FREE STANDING 115V
	P5044770	FOODWARMER, FREE STANDING 230V
4	B4508108	BNB SCREEN SGBNB14
	B4508107	BNB SCREEN SGBNB18
5	A5823902-C	BNB FLUSH WORK TOP SGBNB14
	A5823904-C	BNB FLUSH WORK TOP SGBNB18
6	B5803701-C	BNB PAN SGBNB14
	B5803702-C	BNB PAN SGBNB18
7	A5824002-C	BNB PAN SGBNB14 FLAT TOP
	A5824004-C	BNB PAN SGBNB18 FLAT TOP
8	A5811004-C	BNB HEAT LAMP COVER PLATE
9	PP10023	SCREW 10-24 X 3/8 SELF TAPPING
10	60125801	SCREW 10-24 X 3/8 TH SLOT
11	A5825202-C	SCOOPED PAN LINER DIVIDER SG
12	60143101	FOODWARMER, 10 X 18 115V MARSHALL
13	PP10995	SWITCH, ROCKER SPST (I-0)
14	60143201	FITTING, 1/2 EMT X MALE NPT
15	A5825401-C	CONDUIT, SGBNB EMT
16	A5825501-C	SWITCH BOX, FRONT SGBNB MARSHALL HEAT LAMP
17	A5825601-C	SWITCH BOX, BACK SGBNB MARSHALL HEAT LAMP
18	A5825804-C	TOP WORKSHELF, ENTRANCE BOX SGBNB14 MARSHALL
	A5825802-C	TOP WORKSHELF, ENTRANCE BOX SGBNB18 MARSHALL
19	A5825904-C	TOP WORKSHELF, COVER SGBNB14 MARSHALL
	A5825902-C	TOP WORKSHELF, COVER SGBNB18 MARSHALL
20	B5803803-C	TOP WORKSHELF WELDMENT SGBNB14
	B5803804-C	TOP WORKSHELF TOP WELDMENT SGBNB14 WITH MARSHALL HEAT LAMP
	B5803801-C	TOP WORKSHELF WELDMENT SGBNB18
	B5803802-C	TOP WORKSHELF WELDMENT SGBNB18 WITH MARSHALL HEAT LAMP
21	B6780401	WIRING HARNESS, TOP WORKSHELF MARSHALL HEAT LAMP
22	P5046220	BUSHING, STRAIN RELEIF - SCREW CABLE
23	P5046782	TERMINAL, RING BLUE #10
24	P6071071	WIRE CLAMP, 3/8 NYLON
25	P6071223	GROMMET, RUBBER .50 ID
26	PP10693	SCREW, 10-24 X 3/8 THRUSS HEAD PHILLIPS
27	PP10699	SCREW, 10-24 X 3/4 ROUND HEAD PHILLIPS STAINLESS
28	A5824604-C	TOP WORKSHELF BACK COVER SGBNB14
	A5824602-C	TOP WORKSHELF BACK COVER SGBNB18
29	P6071227	GROMMET, RUBBER .75 ID
30	P6071499	1-1/4 HOLE PLUG
31	A5826002	BNB SPLASH BACK COVER WITH MARSHALL HEAT LAMP
32 NOT SHOWN	B5803902-C	TOP WORKSHELF ASSEMBLY SGBNB14 (INCL. ITEMS 9, 20, 28,29, & 30)
	B5803901-C	TOP WORKSHELF ASSEMBLY SGBNB18 (INCL. ITEMS 9, 20, 28,29, & 30)
	B5804202-C	TOP WK SHF ASSY SGBNB14 W/ HEAT LAMP (INCL. ITEMS 9, 12 THRU 27)
	B5804201-C	TOP WK SHF ASSY SGBNB18 W/ HEAT LAMP (INCL. ITEMS 9, 12 THRU 27)

BNB Drawing T

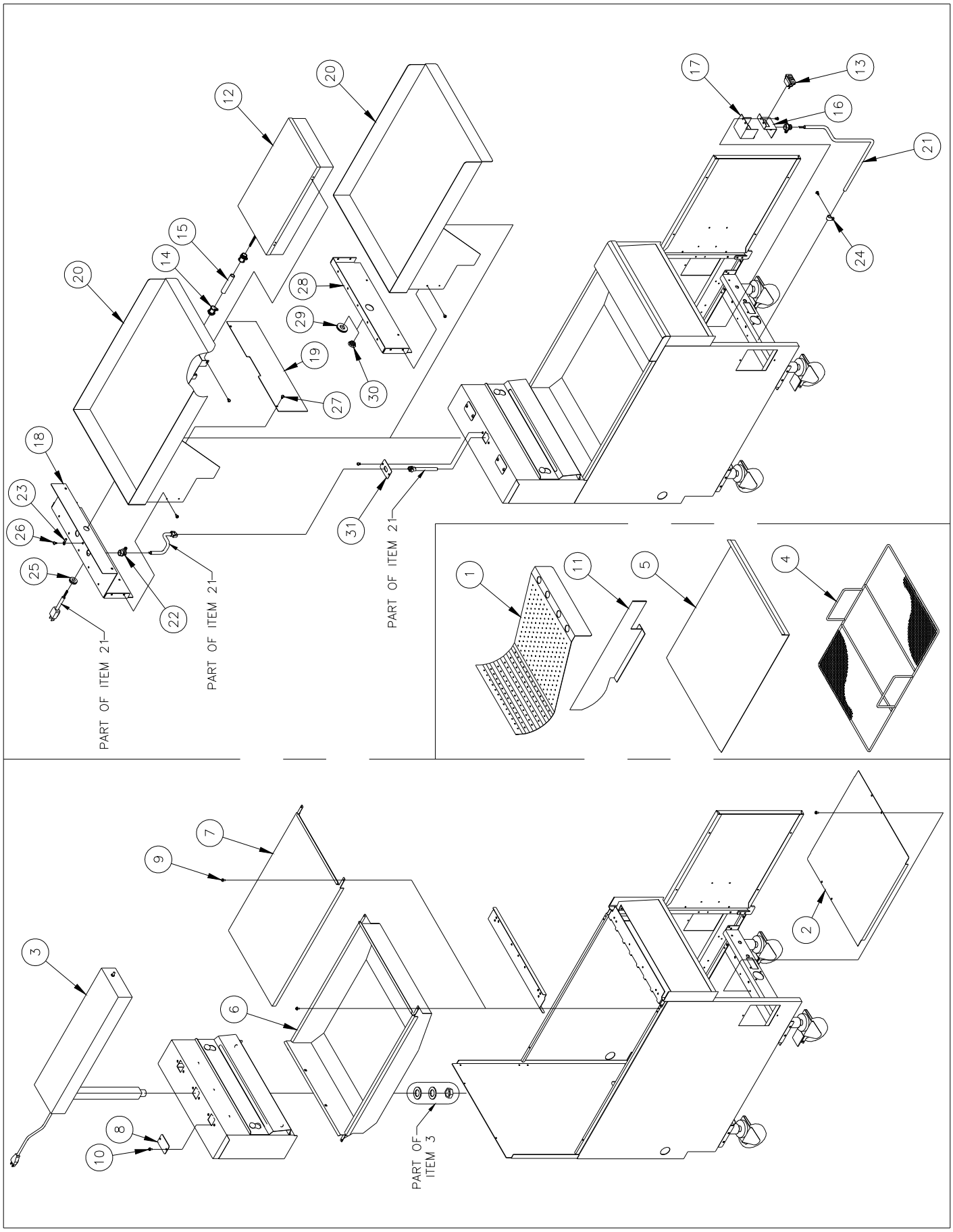

U) DROP INS

Drop Ins Drawing U Parts List

ITEM #	PART #	PART DESCRIPTION
1	B3632501-C	FRONT PANEL TOP DECK, SG14DI, SG14RDI, SG14TDI
	A4107303-C	FRONT PANEL TOP DECK, SG18DI
2	A4107301-C	SPLASH BACK, REAR SG14DI, SG14RDI, SG14TDI
	A4107303-C	SPLASH BACK, REAR SG18DI
3	A3669201-C	FRONT PANEL, SG14DI, SG14RDI, SG14TDI
	A3669301-C	FRONT PANEL, SG18DI
4	PP10023	SCREW 10-24 X 3/8 SELF TAPPING

Drop Ins Drawing U

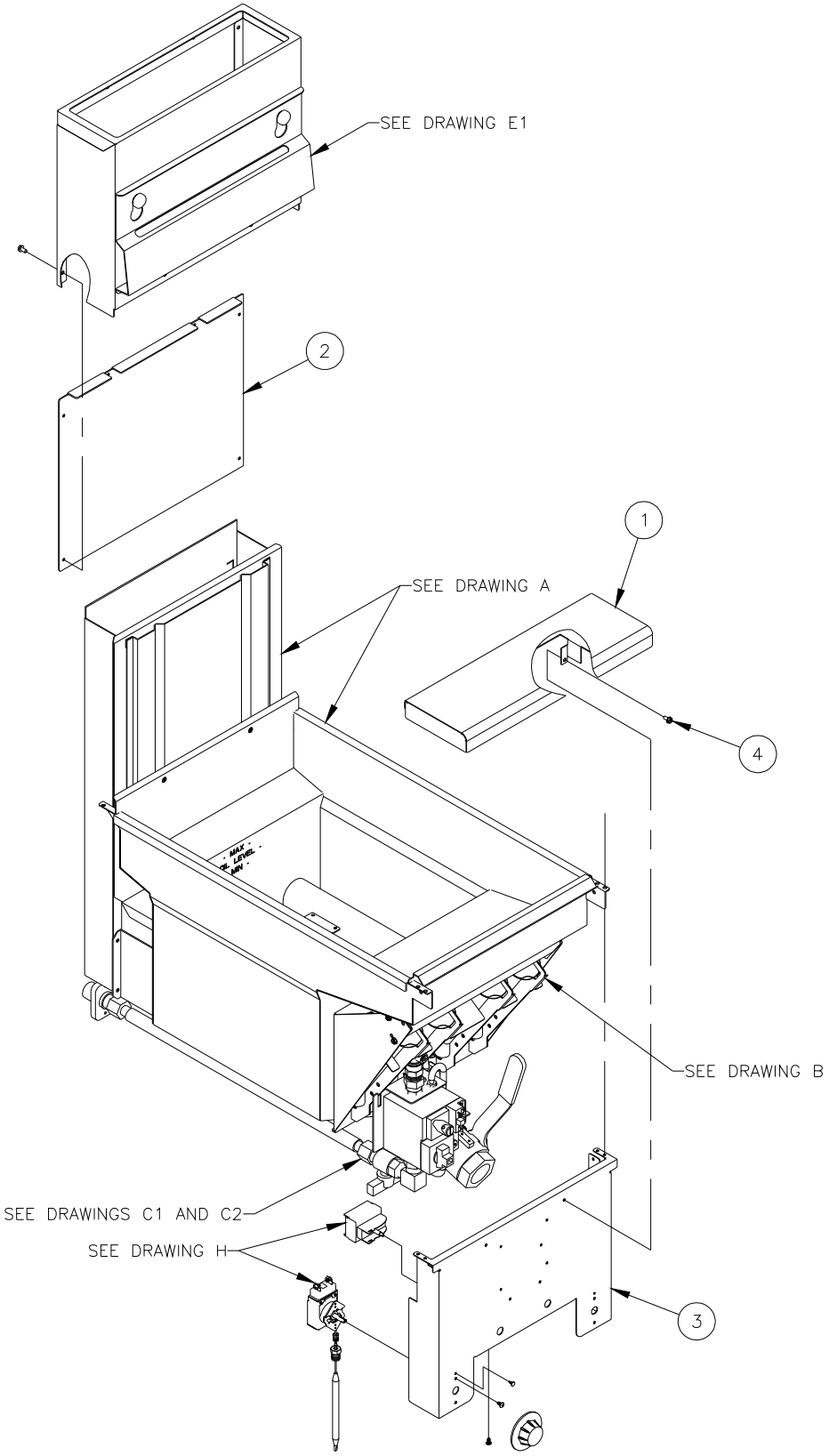

In the event of problems with or questions about your order, please contact the Pitco Frialator factory at (800) 258-3708 US and Canada only (603) 225-6684 World Wide www.pitco.com	In the event of problems with or questions about your equipment, please contact the Pitco Frialator Authorized Service and Parts representative (ASAP) covering your area, or contact Pitco at the numbers listed to the left.

MAILING ADDRESS – P.O. BOX 501, CONCORD, NH 03302-0501
SHIPPING ADDRESS – 10 FERRY ST., CONCORD, NH 03301

L20-221 Rev 4 (06/06)